HMM .075 x .075 HYPERBOLOID SERIES

HYPERBOLOID CONNECTORS

FOR SUPERIOR PERFORMANCE IN ALL APPLICATIONS

IEH CORPORATION ISO 9001:2000

SMALL BUSINESS-HUB-ZONE CERTIFIED

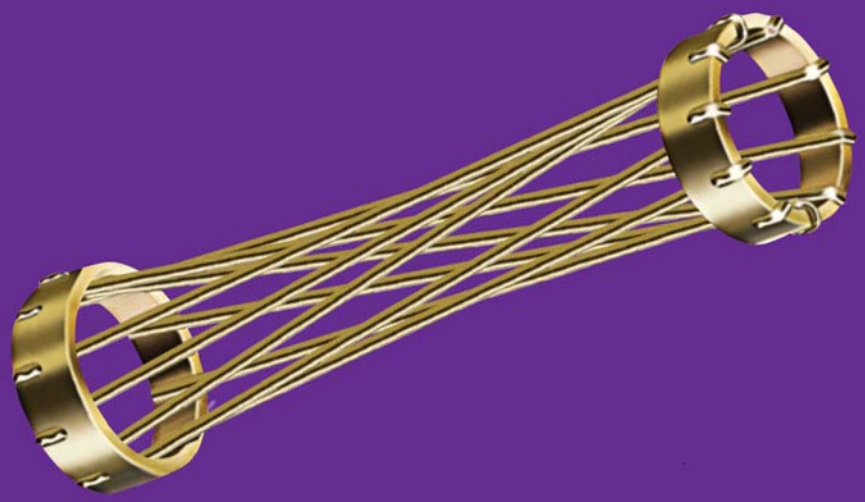

www.iehcorp.com

CONTENTS
HMM SERIES - .075 X .075 CONNECTORS

PAGE

3 Introduction
4 Specifications

5 Ordering Chart - 4 & 6 Row

4 ROW UNINTERRUPTED

6 FAE9, FVEA - Receptacle, Stacking
7 FBE, FDE, FSE, FWE - Receptacle, Straight (Flex Cable, Dip Solder, Solder Cup, Wire Wrap)
8 FEE - Receptacle, Right Angle (Dip Solder)
9 FVE - Receptacle, Compliant
10 MAE9, MVEA - Plug, Stacking
11 MBE, MDE, MSE - Plug, Straight (Flex Cable, Dip Solder, Solder Cup)
12 MVE - Plug, Compliant
13 RBE, RDE, RSE - Plug, Straight, Low Profile (Flex Cable, Dip Solder, Solder Cup)
14 MEE - Plug, Right Angle, Low Profile (Dip Solder)
15 MRE - Plug, Surface Mount, Low Profile

4 ROW INTERRUPTED

16 FAE9, FVEA - Receptacle, Stacking
17 FBE, FDE, FSE, FWE - Receptacle, Straight (Flex Cable, Dip Solder, Solder Cup, Wire Wrap)
18 FEE - Receptacle, Right Angle (Dip Solder)
19 FVE - Receptacle, Compliant
20 MAE9, MVEA - Plug, Stacking
21 MBE, MDE, MSE - Plug, Straight (Flex Cable, Dip Solder, Solder Cup)
22 MVE - Plug, Compliant
23 RBE, RDE, RSE - Plug, Straight, Low Profile (Flex Cable, Dip Solder, Solder Cup)
24 MEE - Plug, Right Angle, Low Profile (Dip Solder)
25 MRE - Plug, Surface Mount, Low Profile

6 ROW INTERRUPTED

26 FAE9, FVEA - Receptacle, Stacking
27 FBE, FDE, FSE, FWE - Receptacle, Straight (Flex Cable, Dip Solder, Solder Cup, Wire Wrap)
28 FEE - Receptacle, Right Angle (Dip Solder)
29 FVE - Receptacle, Compliant
30 MAE9, MVEA - Plug, Stacking
31 MBE, MDE, MSE - Plug, Straight (Flex Cable, Dip Solder, Solder Cup)
32 MVE - Plug, Compliant
33 RBE, RDE, RSE - Plug, Straight, Low Profile (Flex Cable, Dip Solder, Solder Cup)
34 MEE - Plug, Right Angle, Low Profile (Dip Solder)
35 MRE - Plug, Surface Mount, Low Profile

CONTENTS
HMM SERIES - .075 X .075 CONNECTORS

PAGE
36 Ordering Chart - 8 Row

8 ROW UNINTERRUPTED

37 FAE9, FVEA - Receptacle, Stacking
38 FBE, FDE, FSE, FWE - Receptacle, Straight (Flex Cable, Dip Solder, Solder Cup, Wire Wrap)
39 FVE - Receptacle, Compliant
40 MAE9, MVEA - Plug, Stacking
41 MBE, MDE, MSE, MWE - Plug, Straight (Flex Cable, Dip Solder, Solder Cup, Wire Wrap)
42 MVE - Plug, Compliant
43 MEE - Plug, Right Angle Dip Solder

APPENDIX

44 Application Notes - Style ‘MRE’
45 Application Notes - Style ‘MRE’
46 Termination Styles - Receptacle, 4 Row
47 Termination Styles - Plug, 4 Row
48 Termination Styles - Plug, Low Profile, 4 Row
49 Termination Styles - Receptacle, 6 Row
50 Termination Styles - Plug, 6 Row
51 Termination Styles - Plug, Low Profile, 6 Row
52 Termination Styles - Receptacle, 8 Row
53 Termination Styles - Plug, 8 Row
54 Hardware Styles - 4 & 6 Row
55 Hardware Styles - 8 Row
56 Polarization Chart - 4 & 6 Row
57 Polarization Chart - 8 Row
58 PWB Pattern - 4 Row Uninterrupted
59 PWB Pattern - 4 Row Interrupted
60 PWB Pattern - 6 Row Receptacle, Interrupted
61 PWB Pattern - 6 Row Plug, Interrupted
62 PWB Pattern - 8 Row Uninterrupted

SPECIALTY

63 HMM117FEE...
64 HMM117MDE...
65 HMM168[FDE,FSE]...
66 HMM168MEE...
67 HMM200FDE...
68 HMM200FEE...
69 HMM200MDE...
70 HMM200MRE...

The HYPERBOLOID contact is an advanced design that satisfies performance requirements previously considered impossible. Radically different in concept, it is used in connectors having the highest standards of performance. The distinguishing feature of the HYPERBOLOID socket is the hyper-boloid-shaped sleeve formed by straight wires strung at an angle to the longitudinal axis. Viewed from the side, you see a curve defined by a series of apparent short straight line segments which are tangent lines to points along a hyperbolic curve. This geometry provides for a design which has a decreasing circumscribed circle when viewed from the entry. It begins larger than the pin acceptance diameter and is less than this same diameter at the center. When the pin is inserted into this sleeve, the wires stretch, well within elastic limits, to accommodate it. In so doing, the wires wrap themselves around the pin providing a number of continuous line contact paths. The illustration below will assist in visualization.

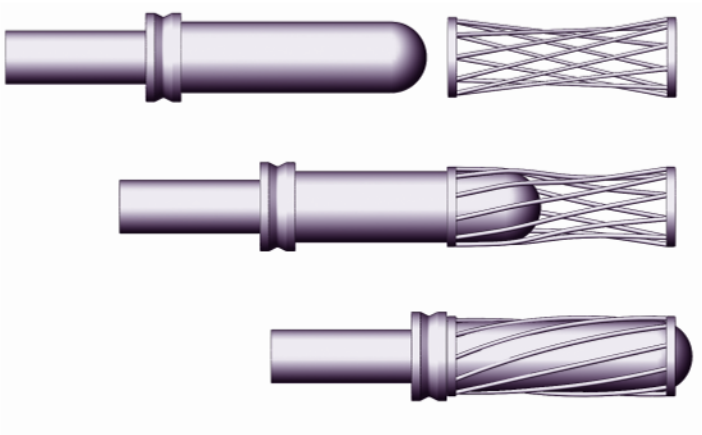

The actual physical construction of the contact involves several components. The wires are strung on an internal wire carrier (inner sleeve) which is subsequently capped or enclosed by a front outer ring (front sleeve) and rear ring which includes the termination configuration (terminal). All components to the assembly are completely finished with the specified electroplating prior to assembly. The wires are continuous process plated on reel before use. In this manner, interface finish requirements can be controlled very closely without the common problems of gradient, shadow, or other finish imperfections often appearing in alternative designs. Very often, this processing feature permits the specifier to reduce precious metal content with resultant savings. Joints are calculated interference fits, insuring gas tight interfaces between all elements of the HYPERBOLOID construction. An exploded view is provided next.

The unique geometry, precision processing, and careful attention to quality result in a highly desirable contact design which provides:

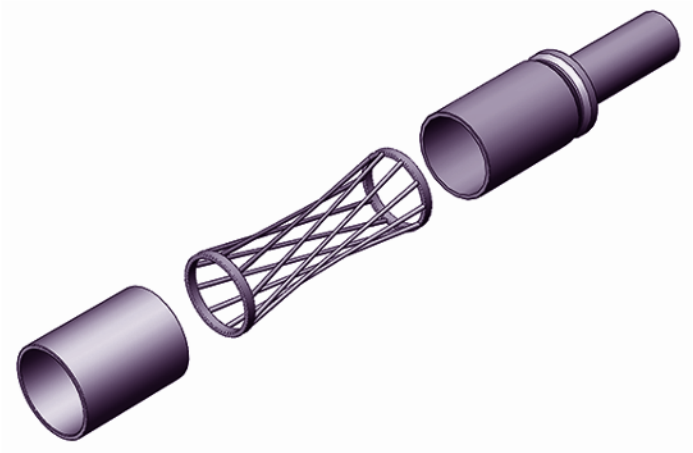

- **VLIF (Very Low Insertion Force):** Common sizes #22 and less average under one ounce per contact.
- **Extraordinary Resistance to Shock & Vibration:** Tests exceeding 300 g's without discontinuity.
- **Duty Cycle Exceeding 100,000 Mate/Demate:** The burnishing action of the wires on the pin surface is non-destructive. Unlike the "plow" and scrape action of common designs, HYPERBOLOID's gentle mating action enhances life.
- **Low, Low Contact Resistance:** The multiplicity of line contact, as opposed to point contact in other designs, provides an excellent interface exhibiting low contact resistance (often less than 1/2 of MIL spec. allowances). This characteristic also provides for a cooler running contact under load.
- **Improved Current Carrying Capacity:** The low contact resistance gives a lower °C rise from ambient under load. This feature often allows the user to operate the same size contact under higher load.
- **Highest Reliability:** In use for over 40 years under the most demanding conditions HYPERBOLOID has proven itself to be the leading design for integrity and reliability. On space platforms, ships and boats at sea, land vehicles, fighter and transport aircraft, missiles, torpedoes, medical and transplant electronics, industrial and environmental controls, rail, construction, ATE and test equipment, PGA sockets, test interface stations, and other applications, HYPERBOLOID has lived up to its promise of the highest reliability connector available.

SPECIFICATIONS

MATERIALS:

Pin Contacts:	PhBr per ASTM B139, BeCu per ASTM B196 or B197, or Cu alloy
Socket Contacts:	
Contact Wires:	BeCu per ASTM B196, or B197
Termination:	PhBr per ASTM B139 or Cu alloy
Support Elements:	Cu alloy
SMT Leads:	PhBr per ASTM B139
Hardware:	Corrosion resistant steel per ASTM A582 ('D' shaped guide receptacles are BeCu per ASTM B196 or B197) or Cu alloy
Insulator:	Modified polyphenylene sulfide per MIL-M-24519, Type GST-40F
Pin Shields:	Aluminum 5052-H32 per QQ-A-250/8

FINISHES:

Pin Contacts:	Gold per MIL-DTL-45204 Type II, Class 1 (.000050), Grade C over Nickel, 0.000050 min., per SAE-AMS-QQ-N-290 over Copper per SAE AMS 2418
Socket Contacts:	
Contact Wires:	Gold per MIL-DTL-45204 Type II, Class 1 (.000050), Grade C over Nickel, 0.000050 min., per SAE-AMS-QQ-N-290 over Copper per SAE AMS 2418
Termination:	Gold per MIL-DTL-45204, Type II Class 00 (.000020), Grade C over Nickel, 0.000050 min., per SAE-AMS-QQ-N-290 over Copper per SAE AMS 2418 or solder dip over Nickel, 0.000050 min., per SAE-AMS-QQ-N-290 over Copper per SAE AMS 2418
Support Elements:	Nickel, 0.000050 min., per SAE-AMS-QQ-N-290 over Copper per SAE AMS 2418
SMT Leads:	Tin/Lead per SAE-AMS-P-81728
Hardware:	Passivate per SAE-AMS2700 except BeCu hardware to be Nickel plate, 0.000050 min.
Pin Shields:	Black Anodize per MIL-A-8625, Type II, Class 2

PERFORMANCE:

Current Rating:	3* amp continuous (higher ratings may be supported-contact factory)
Insulation Resistance:	5000 megaohms min. – EIA-364-21 & MIL-DTL-55302 (par. 4.5.8)
Contact Resistance:	5 milliohms max, - EIA-364-06 & MIL-DTL-55302 (par. 4.5.5)
Test Voltage (DWV):	750 VAC RMS @ sea level - EIA-364-20 & MIL-DTL-55302 (par. 4.5.7.1) 250 VAC RMS @ 70,000 ft.
Temperature:	-65°C to +125°C (-86°F to +257°F)
Mating Force:	0.15 lbs. x number of contacts, max. - MIL-STD-55302 (par. 4.5.4)
De-mating Force:	0.03 lbs. x number of contacts, min. - MIL-STD-55302 (par. 4.5.4)
Contact Life:	100,000 mating cycles – Exceeds MIL-DTL-55302 (par. 4.5.9)
Solderability:	IPC/EIA J-STD-002, Category 3
Humidity:	IAW EIA-364-31, Method IV, except 7A & 7B (not required)
Vibration:	IAW EIA-364-28 & MIL-DTL-55302 (par. 4.5.10)
Shock:	IAW EIA-364-27 & MIL-DTL-55302 (par. 4.5.14)
Salt Spray:	IAW EIA-364-26 & MIL-DTL-55302 (par. 4.5.11)
Temperature Cycling:	IAW EIA-364-32 & MIL-DTL-55302 (par. 4.5.13)

DIMENSIONS:

Catalog product dimensions are nominal.
For linear and positional tolerances, contact factory.

* Ampacity ratings shown are derated in accordance with the published military specifications. For stand-alone, full service ratings, supported by test data, please refer to IEH's Contacts Catalog, or contact the factory.

All information contained herein is believed to be reliable as of the date of publication, but is subject to change without notice. Current product drawings and specifications are available upon request from IEH.

IEH warrants its products to be free of defects affecting normal use. If any shipment is found to be defective we will accept return for repair or replacement at our option within one year of shipment. IEH is not responsible for incidental or consequential damages arising out of the use of our products.

ORDERING CHART
4 & 6-ROW

HMM	058	FDE	1	X	99	E	4	00

Series

Contact Capacity
(Use All 3 Places)

Body Style	
Receptacle	
FAE	Stacking
FBE	Flex Cable
FDE	Dip Solder Straight
FEE	Dip Solder Right Angle
FSE	Solder Cup
FVE	Compliant
FWE	Wire Wrap
Plug	
MAE	Stacking
MBE	Flex Cable
MDE	Dip Solder Straight
MSE	Solder Cup
MVE	Compliant
Plug (Low Profile)	
MEE	Dip Solder Right Angle
MRE	Surface Mount
RBE	Flex Cable
RDE	Dip Solder Straight
RSE	Solder Cup

Termination Length - "L"			
Code	Dip Solder	Wire Wrap	Flex
1	.109	.375	.050
2	.140	.500	.098
3	.172	.625	-
4	.234	-	-
9	User Defined		
0	Use For Solder Cup & Compliant Without Extension		
A	Use For Compliant With Stacking Extension		

Variation Code - Factory Assigned	
20	Solder Dip Terminals
C0	Epoxy Termination Sealed
C2	Epoxy Sealed & Solder Dipped

Row Designation	
4	4 Row Series
6	6 Row Series

Mounting Style	
C	Threaded Insert
E	Threaded Stud
0	No Mount Provision
Check Factory. Not All Styles Are Available In All Configurations.	

Hardware Arrangement	
00	No Hardware
01 - 36	Y - "D" Shaped Guide
65 - 68	Universal - See Appendix
69 - 72	See Appendix
97	2 Pin Guides Unassembled
98	2 Socket Guides Unassembled
99	1 Pin & Socket Unassembled

Hardware Style	
A	Round Guides w/ Mtg. Stud
B	"D" Shaped Guides w/ Mtg. Stud (Polarizing)
H	Short Rotating (Int. Hex)
K	Fixed Locking
T	Fixed Locking w/ Mtg. Stud
X	Round Guides
Y	"D" Shaped Guides (Polarizing)
0	No Hardware Supplied

RECEPTACLE, STACKING
STYLE FAE9, FVEA

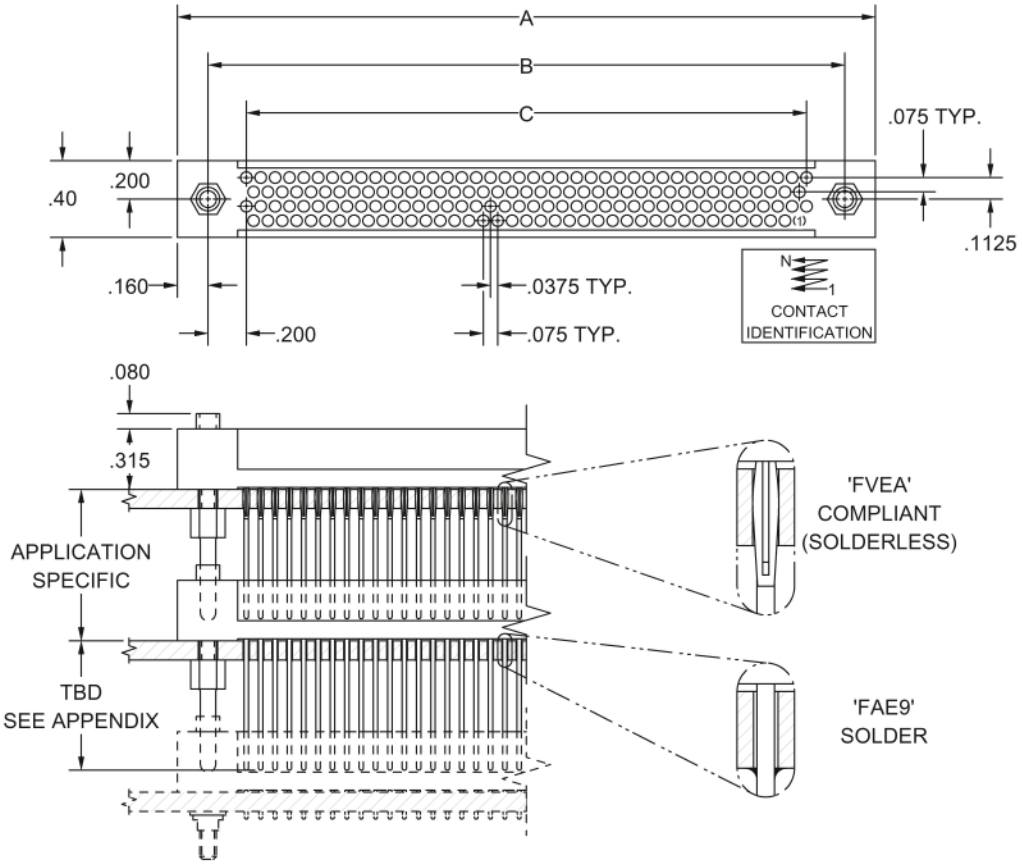

SIZE	A	B	C
058	1.770	1.450	1.050
062	1.845	1.525	1.125
066	1.920	1.600	1.200
070	1.995	1.675	1.275
074	2.070	1.750	1.350
078	2.145	1.825	1.425
082	2.220	1.900	1.500
086	2.295	1.975	1.575
090	2.370	2.050	1.650
094	2.445	2.125	1.725
098	2.520	2.200	1.800
102	2.595	2.275	1.875
106	2.670	2.350	1.950

SIZE	A	B	C
110	2.745	2.425	2.025
114	2.820	2.500	2.100
118	2.895	2.575	2.175
122	2.970	2.650	2.250
126	3.045	2.725	2.325
130	3.120	2.800	2.400
134	3.195	2.875	2.475
138	3.270	2.950	2.550
142	3.345	3.025	2.625
146	3.420	3.100	2.700
150	3.495	3.175	2.775
154	3.570	3.250	2.850
158	3.645	3.325	2.925

REFER TO APPENDIX FOR TERMINATION DETAILS, HARDWARE STYLES, POLARIZATION CHART, AND PWB PATTERNS

RECEPTACLE, STRAIGHT
STYLE FBE, FDE, FSE, FWE

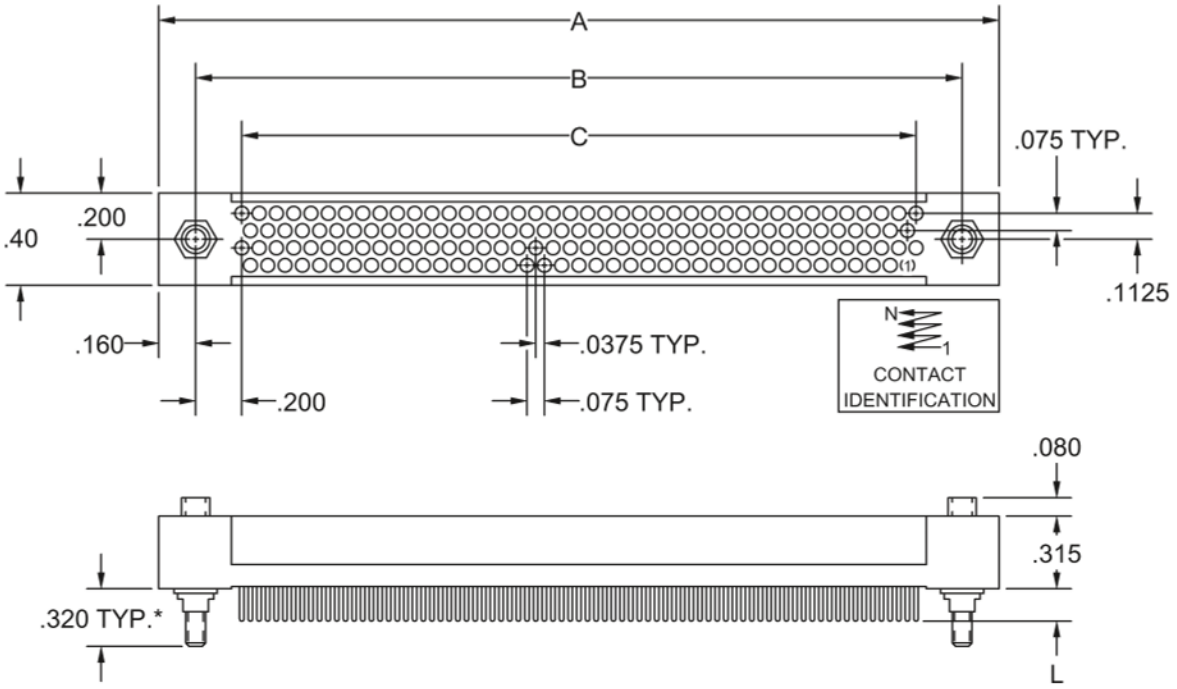

SIZE	A	B	C
058	1.770	1.450	1.050
062	1.845	1.525	1.125
066	1.920	1.600	1.200
070	1.995	1.675	1.275
074	2.070	1.750	1.350
078	2.145	1.825	1.425
082	2.220	1.900	1.500
086	2.295	1.975	1.575
090	2.370	2.050	1.650
094	2.445	2.125	1.725
098	2.520	2.200	1.800
102	2.595	2.275	1.875
106	2.670	2.350	1.950

SIZE	A	B	C
110	2.745	2.425	2.025
114	2.820	2.500	2.100
118	2.895	2.575	2.175
122	2.970	2.650	2.250
126	3.045	2.725	2.325
130	3.120	2.800	2.400
134	3.195	2.875	2.475
138	3.270	2.950	2.550
142	3.345	3.025	2.625
146	3.420	3.100	2.700
150	3.495	3.175	2.775
154	3.570	3.250	2.850
158	3.645	3.325	2.925

REFER TO APPENDIX FOR TERMINATION DETAILS, HARDWARE STYLES, POLARIZATION CHART, AND PWB PATTERNS

RECEPTACLE, RIGHT ANGLE
STYLE FEE

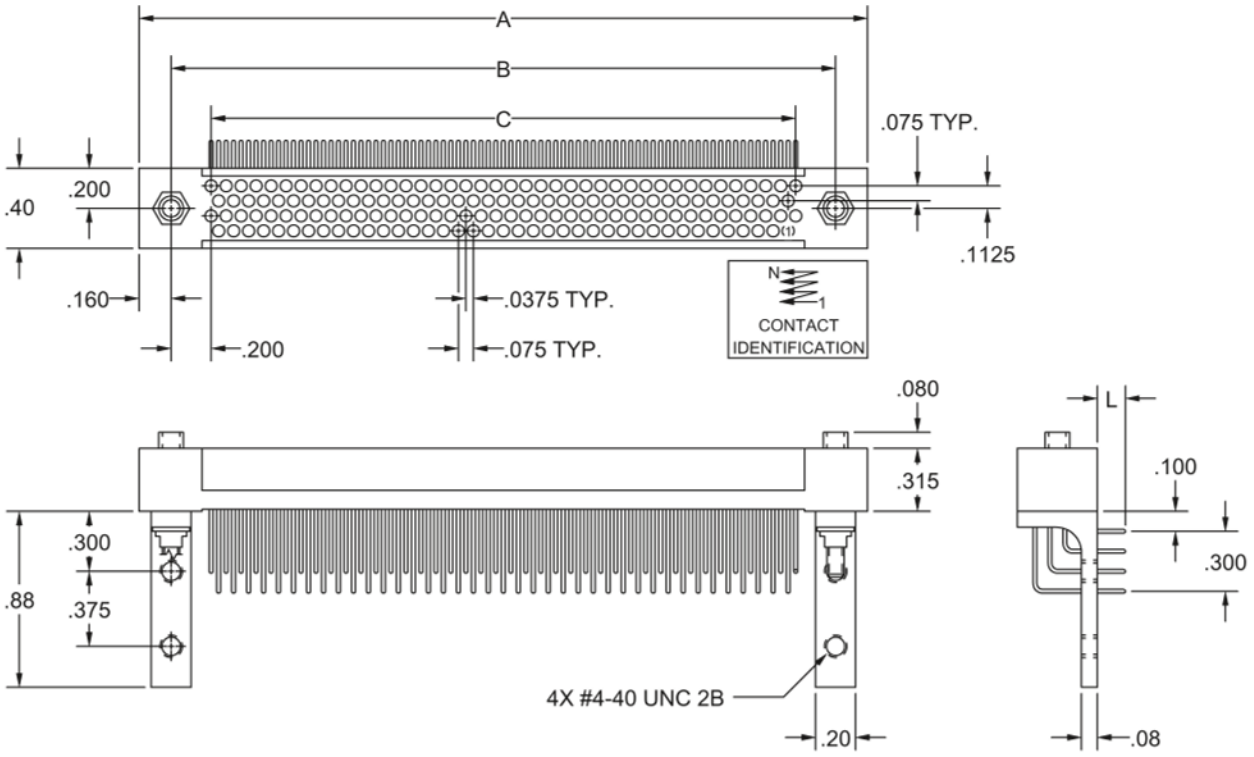

SIZE	A	B	C
058	1.770	1.450	1.050
062	1.845	1.525	1.125
066	1.920	1.600	1.200
070	1.995	1.675	1.275
074	2.070	1.750	1.350
078	2.145	1.825	1.425
082	2.220	1.900	1.500
086	2.295	1.975	1.575
090	2.370	2.050	1.650
094	2.445	2.125	1.725
098	2.520	2.200	1.800
102	2.595	2.275	1.875
106	2.670	2.350	1.950

SIZE	A	B	C
110	2.745	2.425	2.025
114	2.820	2.500	2.100
118	2.895	2.575	2.175
122	2.970	2.650	2.250
126	3.045	2.725	2.325
130	3.120	2.800	2.400
134	3.195	2.875	2.475
138	3.270	2.950	2.550
142	3.345	3.025	2.625
146	3.420	3.100	2.700
150	3.495	3.175	2.775
154	3.570	3.250	2.850
158	3.645	3.325	2.925

REFER TO APPENDIX FOR TERMINATION DETAILS, HARDWARE STYLES, POLARIZATION CHART, AND PWB PATTERNS

RECEPTACLE, COMPLIANT
STYLE FVE

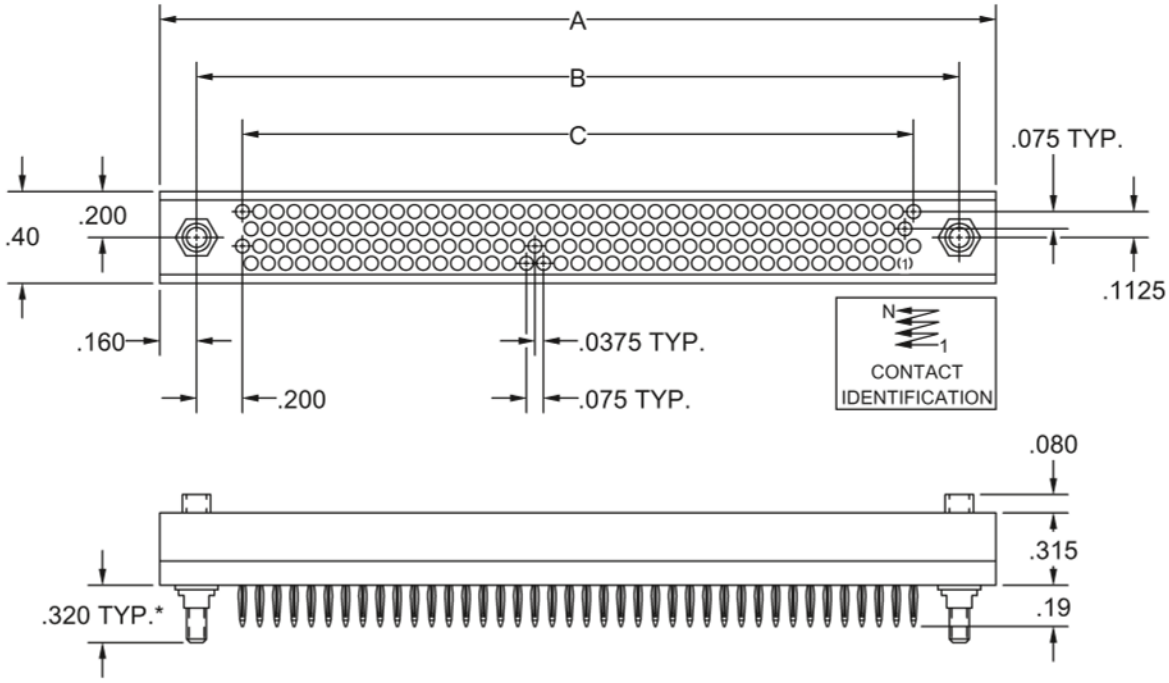

SIZE	A	B	C
058	1.770	1.450	1.050
062	1.845	1.525	1.125
066	1.920	1.600	1.200
070	1.995	1.675	1.275
074	2.070	1.750	1.350
078	2.145	1.825	1.425
082	2.220	1.900	1.500
086	2.295	1.975	1.575
090	2.370	2.050	1.650
094	2.445	2.125	1.725
098	2.520	2.200	1.800
102	2.595	2.275	1.875
106	2.670	2.350	1.950

SIZE	A	B	C
110	2.745	2.425	2.025
114	2.820	2.500	2.100
118	2.895	2.575	2.175
122	2.970	2.650	2.250
126	3.045	2.725	2.325
130	3.120	2.800	2.400
134	3.195	2.875	2.475
138	3.270	2.950	2.550
142	3.345	3.025	2.625
146	3.420	3.100	2.700
150	3.495	3.175	2.775
154	3.570	3.250	2.850
158	3.645	3.325	2.925

REFER TO APPENDIX FOR TERMINATION DETAILS, HARDWARE STYLES, POLARIZATION CHART, AND PWB PATTERNS

PLUG, STACKING
STYLE MAE9, MVEA

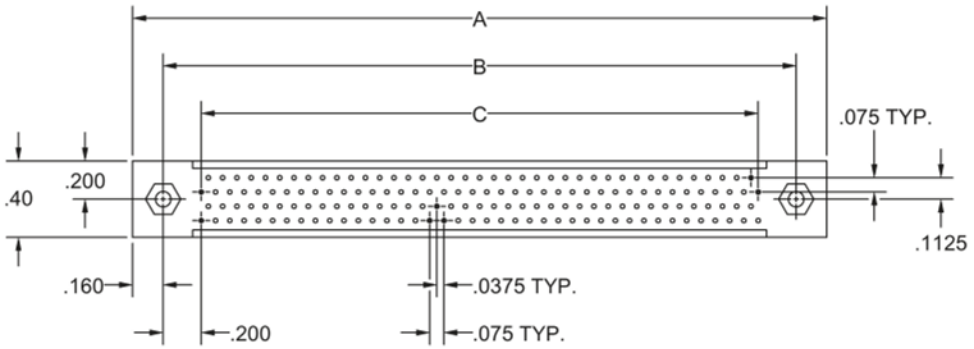

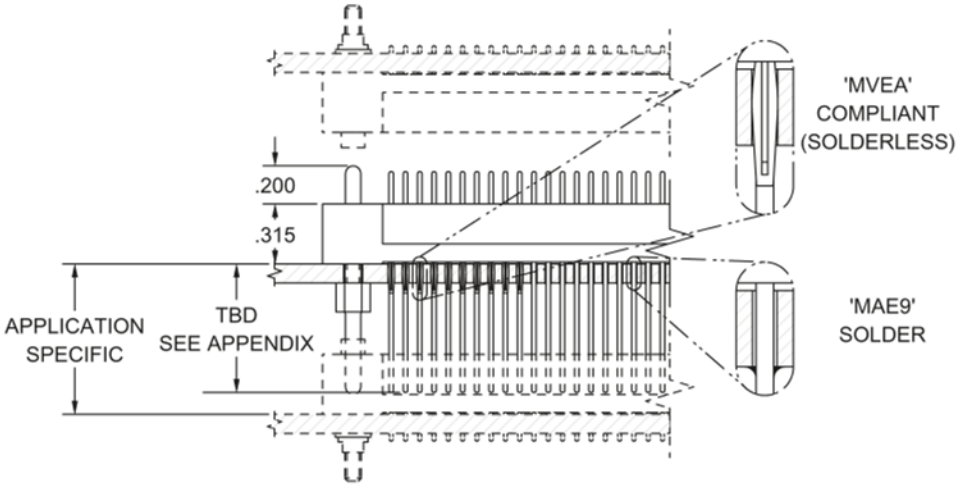

SIZE	A	B	C
058	1.770	1.450	1.050
062	1.845	1.525	1.125
066	1.920	1.600	1.200
070	1.995	1.675	1.275
074	2.070	1.750	1.350
078	2.145	1.825	1.425
082	2.220	1.900	1.500
086	2.295	1.975	1.575
090	2.370	2.050	1.650
094	2.445	2.125	1.725
098	2.520	2.200	1.800
102	2.595	2.275	1.875
106	2.670	2.350	1.950

SIZE	A	B	C
110	2.745	2.425	2.025
114	2.820	2.500	2.100
118	2.895	2.575	2.175
122	2.970	2.650	2.250
126	3.045	2.725	2.325
130	3.120	2.800	2.400
134	3.195	2.875	2.475
138	3.270	2.950	2.550
142	3.345	3.025	2.625
146	3.420	3.100	2.700
150	3.495	3.175	2.775
154	3.570	3.250	2.850
158	3.645	3.325	2.925

REFER TO APPENDIX FOR TERMINATION DETAILS, HARDWARE STYLES, POLARIZATION CHART, AND PWB PATTERNS

PLUG, STRAIGHT
STYLE MBE, MDE, MSE

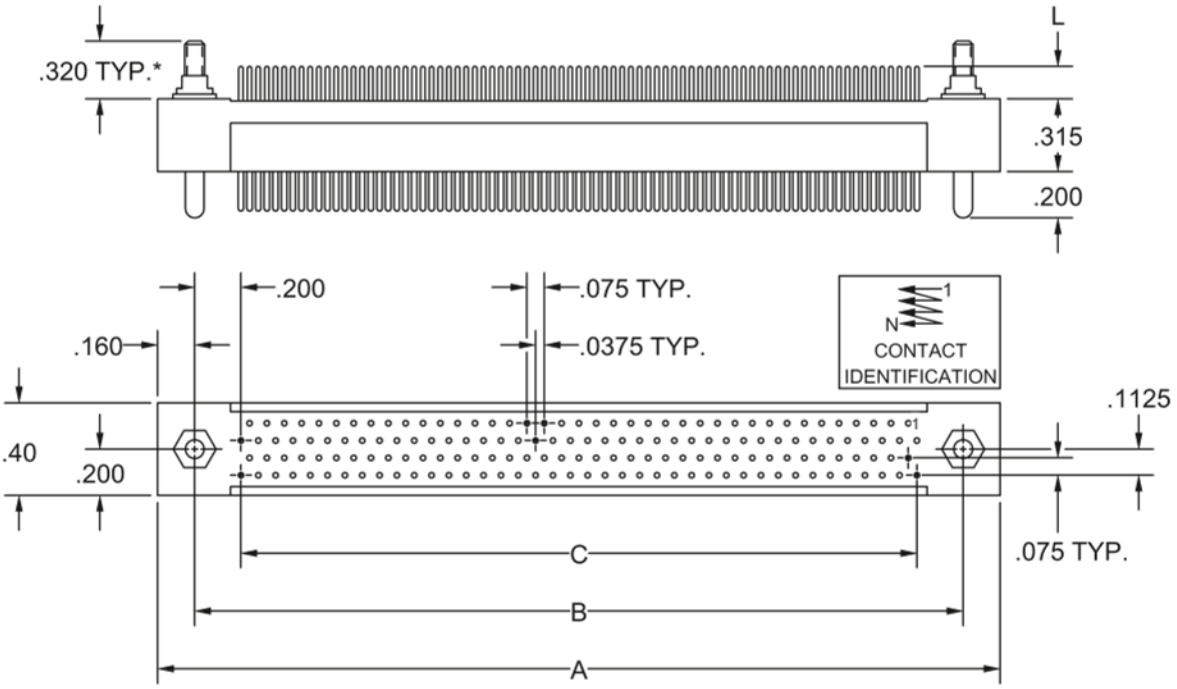

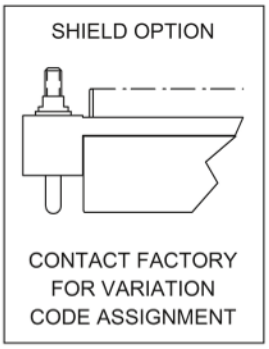

SIZE	A	B	C
058	1.770	1.450	1.050
062	1.845	1.525	1.125
066	1.920	1.600	1.200
070	1.995	1.675	1.275
074	2.070	1.750	1.350
078	2.145	1.825	1.425
082	2.220	1.900	1.500
086	2.295	1.975	1.575
090	2.370	2.050	1.650
094	2.445	2.125	1.725
098	2.520	2.200	1.800
102	2.595	2.275	1.875
106	2.670	2.350	1.950

SIZE	A	B	C
110	2.745	2.425	2.025
114	2.820	2.500	2.100
118	2.895	2.575	2.175
122	2.970	2.650	2.250
126	3.045	2.725	2.325
130	3.120	2.800	2.400
134	3.195	2.875	2.475
138	3.270	2.950	2.550
142	3.345	3.025	2.625
146	3.420	3.100	2.700
150	3.495	3.175	2.775
154	3.570	3.250	2.850
158	3.645	3.325	2.925

REFER TO APPENDIX FOR TERMINATION DETAILS, HARDWARE STYLES, POLARIZATION CHART, AND PWB PATTERNS

PLUG, COMPLIANT
STYLE MVE

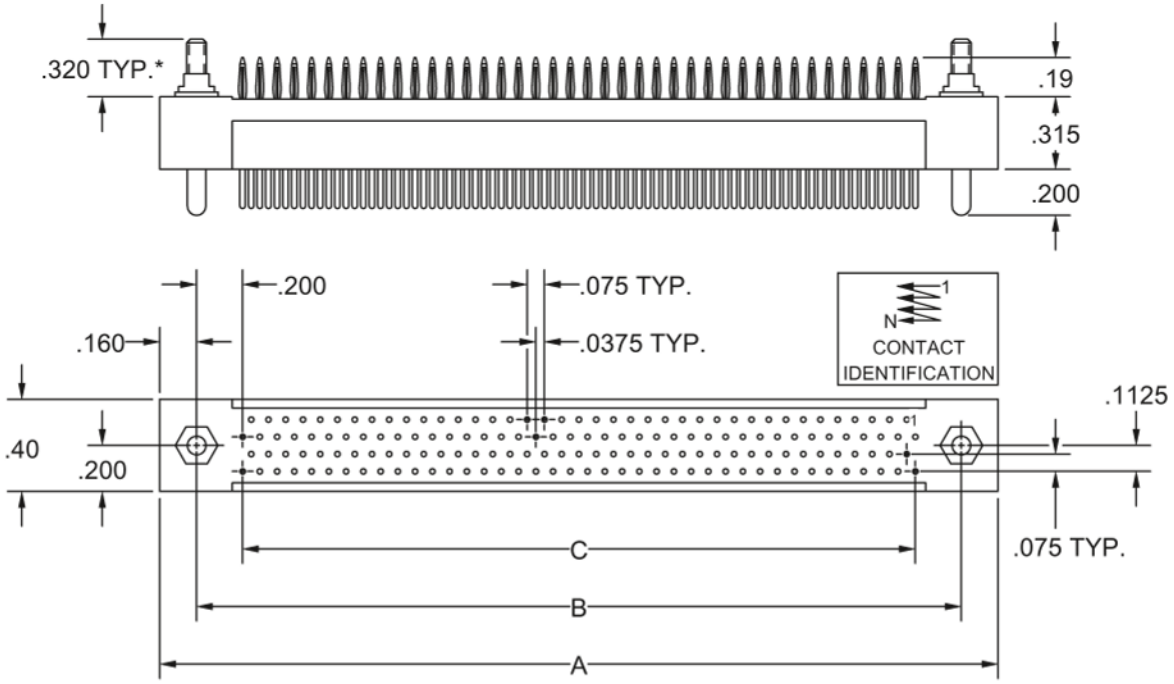

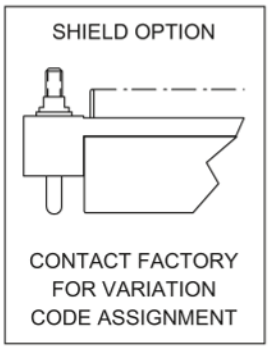

SIZE	A	B	C
058	1.770	1.450	1.050
062	1.845	1.525	1.125
066	1.920	1.600	1.200
070	1.995	1.675	1.275
074	2.070	1.750	1.350
078	2.145	1.825	1.425
082	2.220	1.900	1.500
086	2.295	1.975	1.575
090	2.370	2.050	1.650
094	2.445	2.125	1.725
098	2.520	2.200	1.800
102	2.595	2.275	1.875
106	2.670	2.350	1.950

SIZE	A	B	C
110	2.745	2.425	2.025
114	2.820	2.500	2.100
118	2.895	2.575	2.175
122	2.970	2.650	2.250
126	3.045	2.725	2.325
130	3.120	2.800	2.400
134	3.195	2.875	2.475
138	3.270	2.950	2.550
142	3.345	3.025	2.625
146	3.420	3.100	2.700
150	3.495	3.175	2.775
154	3.570	3.250	2.850
158	3.645	3.325	2.925

REFER TO APPENDIX FOR TERMINATION DETAILS, HARDWARE STYLES, POLARIZATION CHART, AND PWB PATTERNS

PLUG, STRAIGHT, LOW PROFILE
STYLE RBE, RDE, RSE

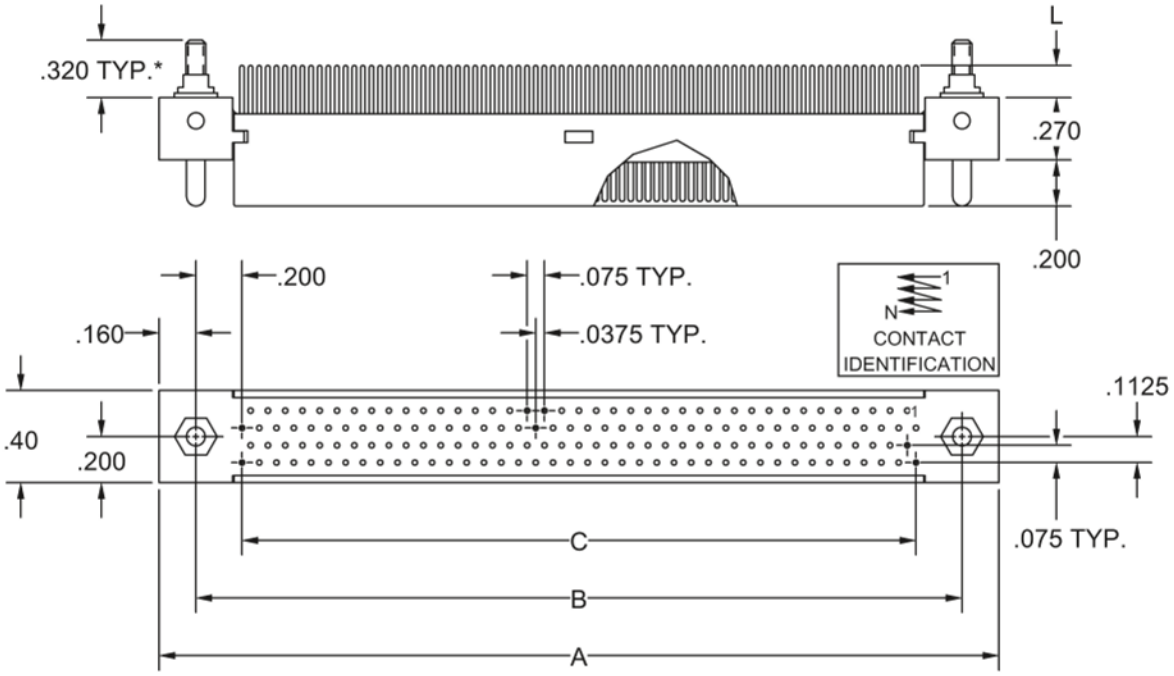

SIZE	A	B	C
058	1.770	1.450	1.050
062	1.845	1.525	1.125
066	1.920	1.600	1.200
070	1.995	1.675	1.275
074	2.070	1.750	1.350
078	2.145	1.825	1.425
082	2.220	1.900	1.500
086	2.295	1.975	1.575
090	2.370	2.050	1.650
094	2.445	2.125	1.725
098	2.520	2.200	1.800
102	2.595	2.275	1.875
106	2.670	2.350	1.950

SIZE	A	B	C
110	2.745	2.425	2.025
114	2.820	2.500	2.100
118	2.895	2.575	2.175
122	2.970	2.650	2.250
126	3.045	2.725	2.325
130	3.120	2.800	2.400
134	3.195	2.875	2.475
138	3.270	2.950	2.550
142	3.345	3.025	2.625
146	3.420	3.100	2.700
150	3.495	3.175	2.775
154	3.570	3.250	2.850
158	3.645	3.325	2.925

REFER TO APPENDIX FOR TERMINATION DETAILS, HARDWARE STYLES, POLARIZATION CHART, AND PWB PATTERNS

PLUG, RIGHT ANGLE, LOW PROFILE
STYLE MEE

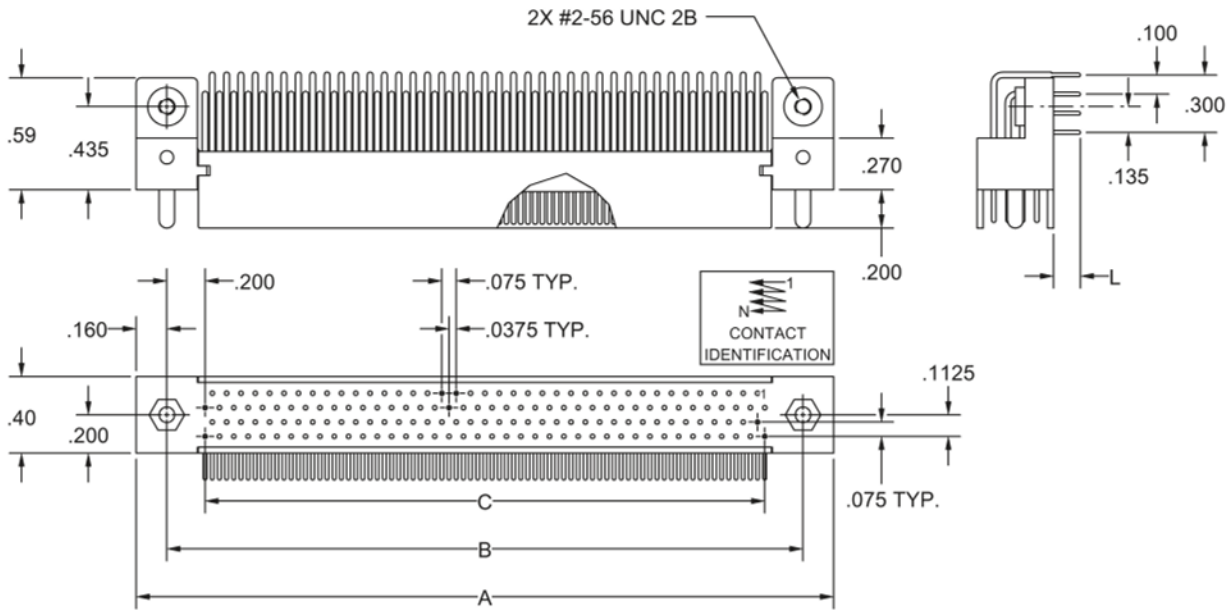

SIZE	A	B	C
058	1.770	1.450	1.050
062	1.845	1.525	1.125
066	1.920	1.600	1.200
070	1.995	1.675	1.275
074	2.070	1.750	1.350
078	2.145	1.825	1.425
082	2.220	1.900	1.500
086	2.295	1.975	1.575
090	2.370	2.050	1.650
094	2.445	2.125	1.725
098	2.520	2.200	1.800
102	2.595	2.275	1.875
106	2.670	2.350	1.950

SIZE	A	B	C
110	2.745	2.425	2.025
114	2.820	2.500	2.100
118	2.895	2.575	2.175
122	2.970	2.650	2.250
126	3.045	2.725	2.325
130	3.120	2.800	2.400
134	3.195	2.875	2.475
138	3.270	2.950	2.550
142	3.345	3.025	2.625
146	3.420	3.100	2.700
150	3.495	3.175	2.775
154	3.570	3.250	2.850
158	3.645	3.325	2.925

REFER TO APPENDIX FOR TERMINATION DETAILS, HARDWARE STYLES, POLARIZATION CHART, AND PWB PATTERNS

PLUG, SURFACE MOUNT, LOW PROFILE
STYLE MRE

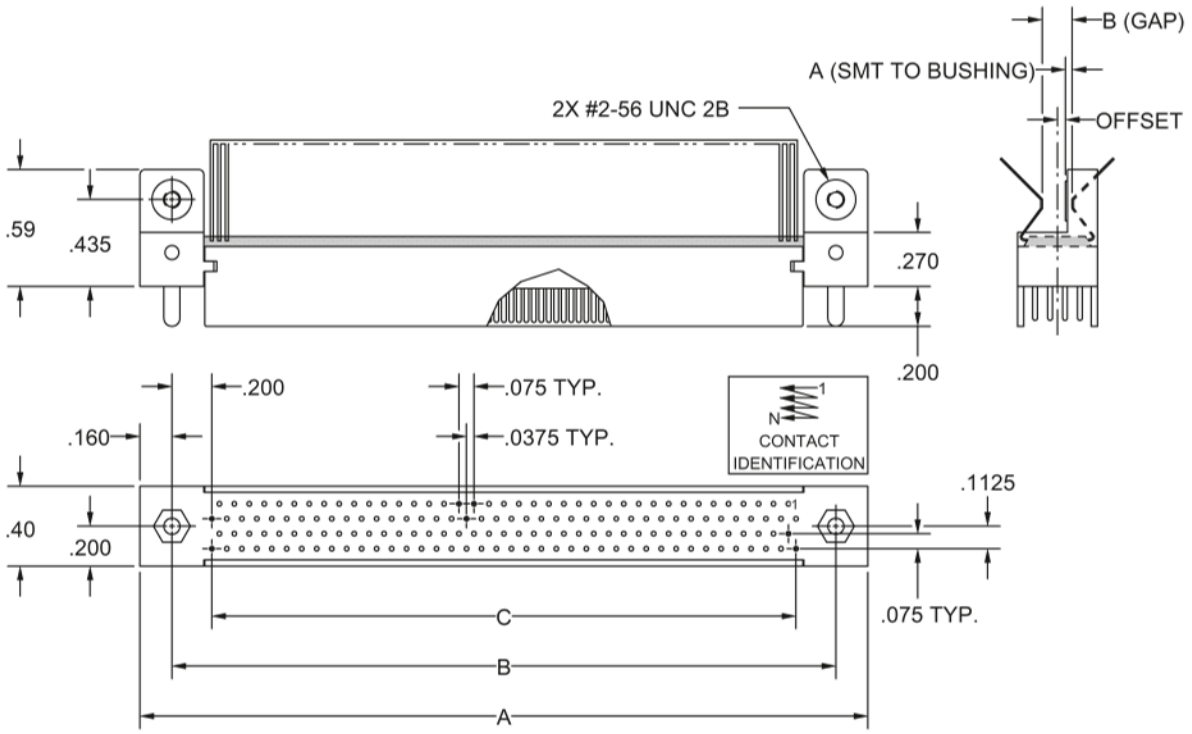

SIZE	A	B	C
058	1.770	1.450	1.050
062	1.845	1.525	1.125
066	1.920	1.600	1.200
070	1.995	1.675	1.275
074	2.070	1.750	1.350
078	2.145	1.825	1.425
082	2.220	1.900	1.500
086	2.295	1.975	1.575
090	2.370	2.050	1.650
094	2.445	2.125	1.725
098	2.520	2.200	1.800
102	2.595	2.275	1.875
106	2.670	2.350	1.950

SIZE	A	B	C
110	2.745	2.425	2.025
114	2.820	2.500	2.100
118	2.895	2.575	2.175
122	2.970	2.650	2.250
126	3.045	2.725	2.325
130	3.120	2.800	2.400
134	3.195	2.875	2.475
138	3.270	2.950	2.550
142	3.345	3.025	2.625
146	3.420	3.100	2.700
150	3.495	3.175	2.775
154	3.570	3.250	2.850
158	3.645	3.325	2.925

REFER TO APPENDIX FOR TERMINATION DETAILS, HARDWARE STYLES, POLARIZATION CHART, AND PWB PATTERNS

RECEPTACLE, STACKING
STYLE FAE9, FVEA

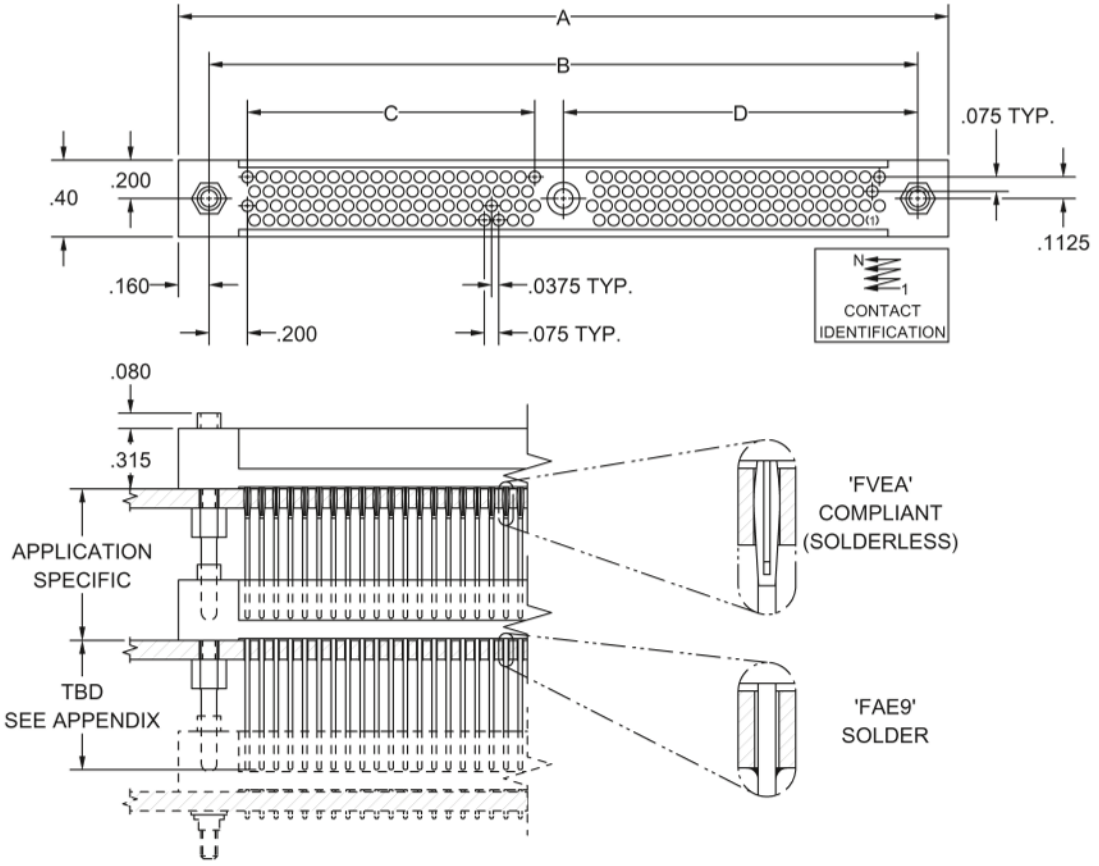

SIZE	A	B	C	D
164	4.020	3.700	1.500	1.850
172	4.170	3.850	1.575	1.925
180	4.320	4.000	1.650	2.000
188	4.470	4.150	1.725	2.075
196	4.620	4.300	1.800	2.150
204	4.770	4.450	1.875	2.225
212	4.920	4.600	1.950	2.300
220	5.070	4.750	2.025	2.375
228	5.220	4.900	2.100	2.450
236	5.370	5.050	2.175	2.525
244	5.520	5.200	2.250	2.600
252	5.670	5.350	2.325	2.675
260	5.820	5.500	2.400	2.750
268	5.970	5.650	2.475	2.825
276	6.120	5.800	2.550	2.900
284	6.270	5.950	2.625	2.975

SIZE	A	B	C	D
292	6.420	6.100	2.700	3.050
300	6.570	6.250	2.775	3.125
308	6.720	6.400	2.850	3.200
316	6.870	6.550	2.925	3.275
324	7.020	6.700	3.000	3.350
332	7.170	6.850	3.075	3.425
340	7.320	7.000	3.150	3.500
348	7.470	7.150	3.225	3.575
356	7.620	7.300	3.300	3.650
364	7.770	7.450	3.375	3.725
372	7.920	7.600	3.450	3.800
380	8.070	7.750	3.525	3.875
388	8.220	7.900	3.600	3.950
396	8.370	8.050	3.675	4.025
404	8.520	8.200	3.750	4.100

REFER TO APPENDIX FOR TERMINATION DETAILS, HARDWARE STYLES, POLARIZATION CHART, AND PWB PATTERNS

RECEPTACLE, STRAIGHT
STYLE FBE, FDE, FSE, FWE

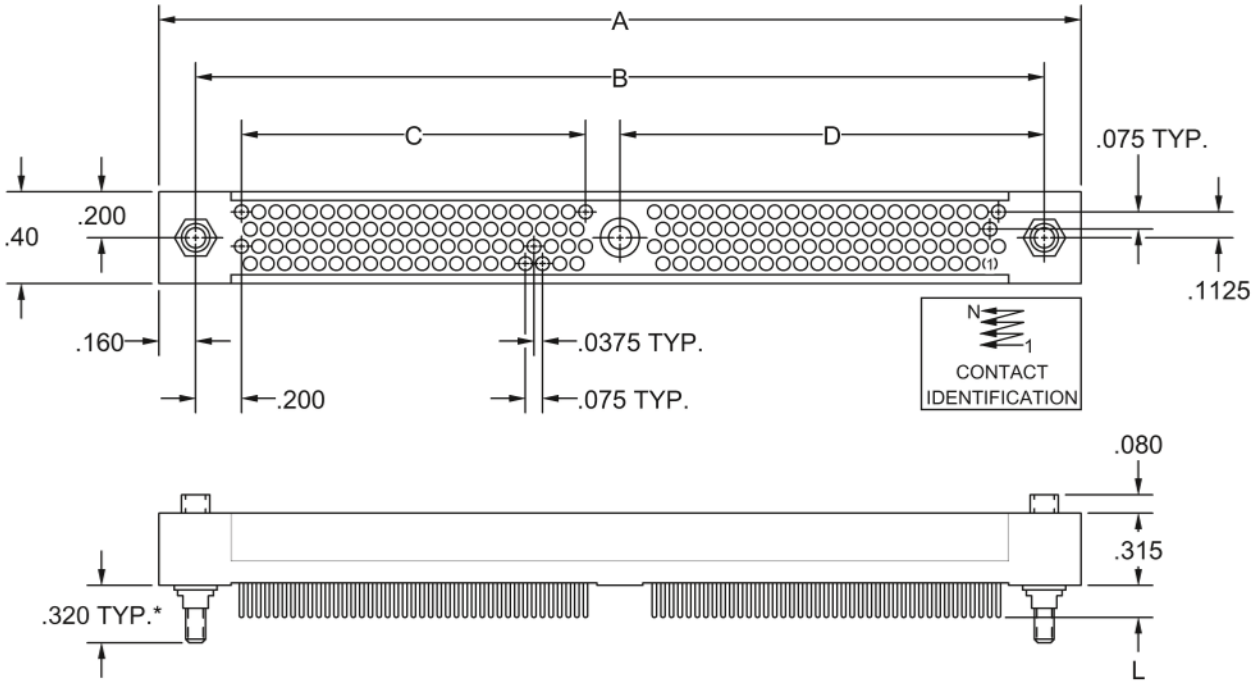

SIZE	A	B	C	D
164	4.020	3.700	1.500	1.850
172	4.170	3.850	1.575	1.925
180	4.320	4.000	1.650	2.000
188	4.470	4.150	1.725	2.075
196	4.620	4.300	1.800	2.150
204	4.770	4.450	1.875	2.225
212	4.920	4.600	1.950	2.300
220	5.070	4.750	2.025	2.375
228	5.220	4.900	2.100	2.450
236	5.370	5.050	2.175	2.525
244	5.520	5.200	2.250	2.600
252	5.670	5.350	2.325	2.675
260	5.820	5.500	2.400	2.750
268	5.970	5.650	2.475	2.825
276	6.120	5.800	2.550	2.900
284	6.270	5.950	2.625	2.975

SIZE	A	B	C	D
292	6.420	6.100	2.700	3.050
300	6.570	6.250	2.775	3.125
308	6.720	6.400	2.850	3.200
316	6.870	6.550	2.925	3.275
324	7.020	6.700	3.000	3.350
332	7.170	6.850	3.075	3.425
340	7.320	7.000	3.150	3.500
348	7.470	7.150	3.225	3.575
356	7.620	7.300	3.300	3.650
364	7.770	7.450	3.375	3.725
372	7.920	7.600	3.450	3.800
380	8.070	7.750	3.525	3.875
388	8.220	7.900	3.600	3.950
396	8.370	8.050	3.675	4.025
404	8.520	8.200	3.750	4.100

REFER TO APPENDIX FOR TERMINATION DETAILS, HARDWARE STYLES, POLARIZATION CHART, AND PWB PATTERNS

RECEPTACLE, RIGHT ANGLE
STYLE FEE

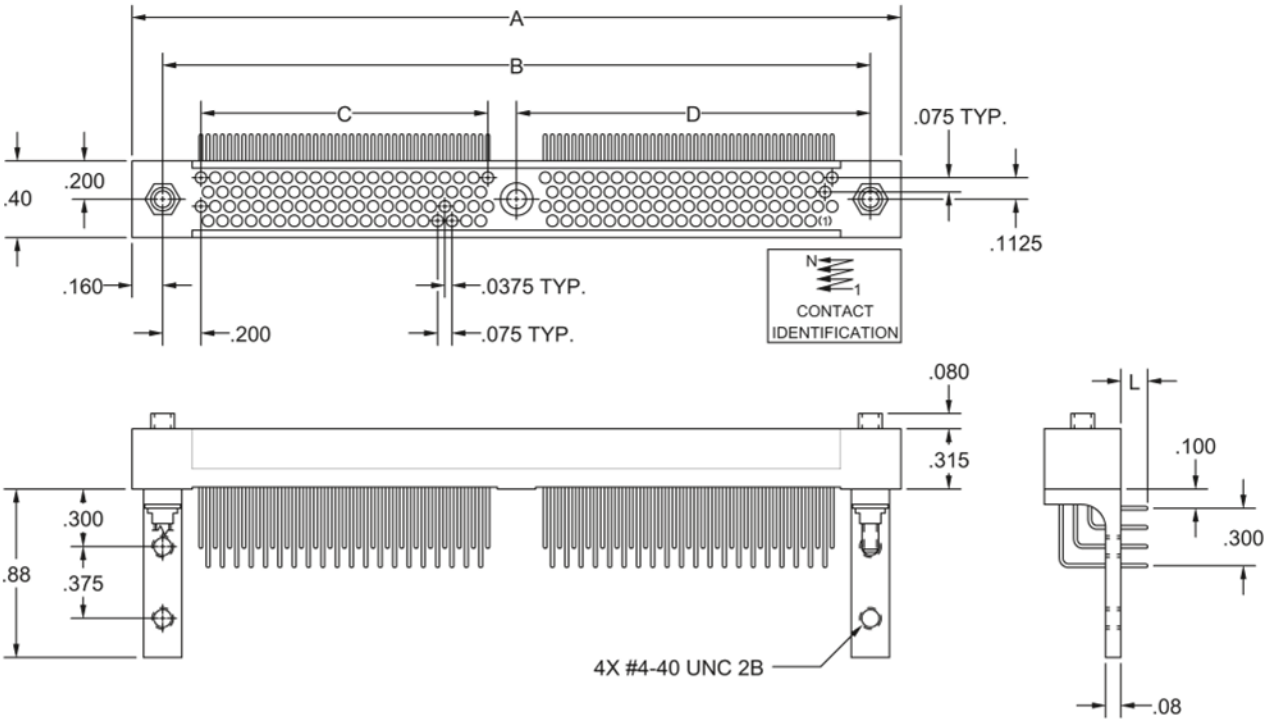

SIZE	A	B	C	D
164	4.020	3.700	1.500	1.850
172	4.170	3.850	1.575	1.925
180	4.320	4.000	1.650	2.000
188	4.470	4.150	1.725	2.075
196	4.620	4.300	1.800	2.150
204	4.770	4.450	1.875	2.225
212	4.920	4.600	1.950	2.300
220	5.070	4.750	2.025	2.375
228	5.220	4.900	2.100	2.450
236	5.370	5.050	2.175	2.525
244	5.520	5.200	2.250	2.600
252	5.670	5.350	2.325	2.675
260	5.820	5.500	2.400	2.750
268	5.970	5.650	2.475	2.825
276	6.120	5.800	2.550	2.900
284	6.270	5.950	2.625	2.975

SIZE	A	B	C	D
292	6.420	6.100	2.700	3.050
300	6.570	6.250	2.775	3.125
308	6.720	6.400	2.850	3.200
316	6.870	6.550	2.925	3.275
324	7.020	6.700	3.000	3.350
332	7.170	6.850	3.075	3.425
340	7.320	7.000	3.150	3.500
348	7.470	7.150	3.225	3.575
356	7.620	7.300	3.300	3.650
364	7.770	7.450	3.375	3.725
372	7.920	7.600	3.450	3.800
380	8.070	7.750	3.525	3.875
388	8.220	7.900	3.600	3.950
396	8.370	8.050	3.675	4.025
404	8.520	8.200	3.750	4.100

REFER TO APPENDIX FOR TERMINATION DETAILS, HARDWARE STYLES, POLARIZATION CHART, AND PWB PATTERNS

RECEPTACLE, COMPLIANT
STYLE FVE

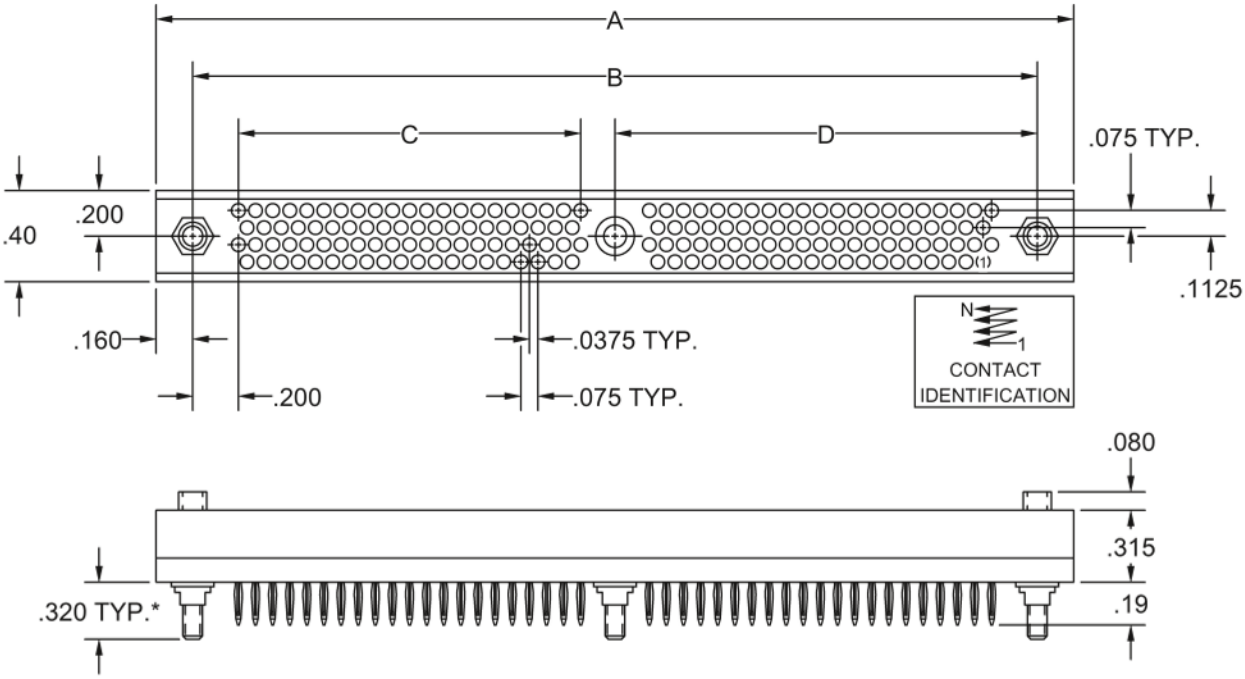

SIZE	A	B	C	D
164	4.020	3.700	1.500	1.850
172	4.170	3.850	1.575	1.925
180	4.320	4.000	1.650	2.000
188	4.470	4.150	1.725	2.075
196	4.620	4.300	1.800	2.150
204	4.770	4.450	1.875	2.225
212	4.920	4.600	1.950	2.300
220	5.070	4.750	2.025	2.375
228	5.220	4.900	2.100	2.450
236	5.370	5.050	2.175	2.525
244	5.520	5.200	2.250	2.600
252	5.670	5.350	2.325	2.675
260	5.820	5.500	2.400	2.750
268	5.970	5.650	2.475	2.825
276	6.120	5.800	2.550	2.900
284	6.270	5.950	2.625	2.975

SIZE	A	B	C	D
292	6.420	6.100	2.700	3.050
300	6.570	6.250	2.775	3.125
308	6.720	6.400	2.850	3.200
316	6.870	6.550	2.925	3.275
324	7.020	6.700	3.000	3.350
332	7.170	6.850	3.075	3.425
340	7.320	7.000	3.150	3.500
348	7.470	7.150	3.225	3.575
356	7.620	7.300	3.300	3.650
364	7.770	7.450	3.375	3.725
372	7.920	7.600	3.450	3.800
380	8.070	7.750	3.525	3.875
388	8.220	7.900	3.600	3.950
396	8.370	8.050	3.675	4.025
404	8.520	8.200	3.750	4.100

REFER TO APPENDIX FOR TERMINATION DETAILS, HARDWARE STYLES, POLARIZATION CHART, AND PWB PATTERNS

PLUG, STACKING
STYLE MAE9, MVEA

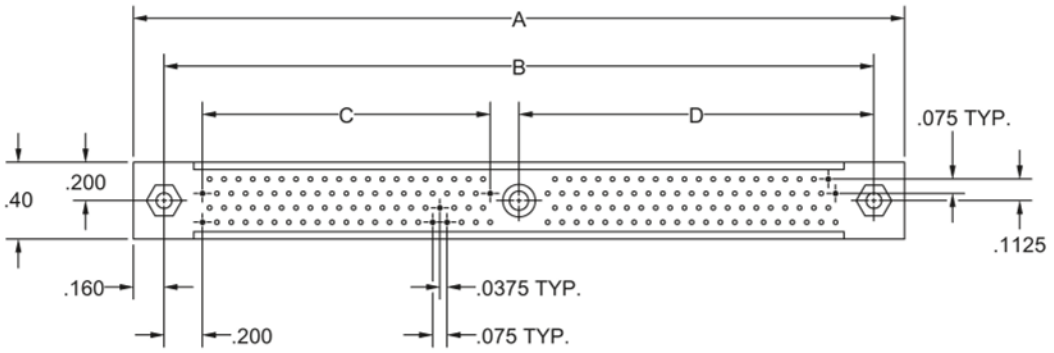

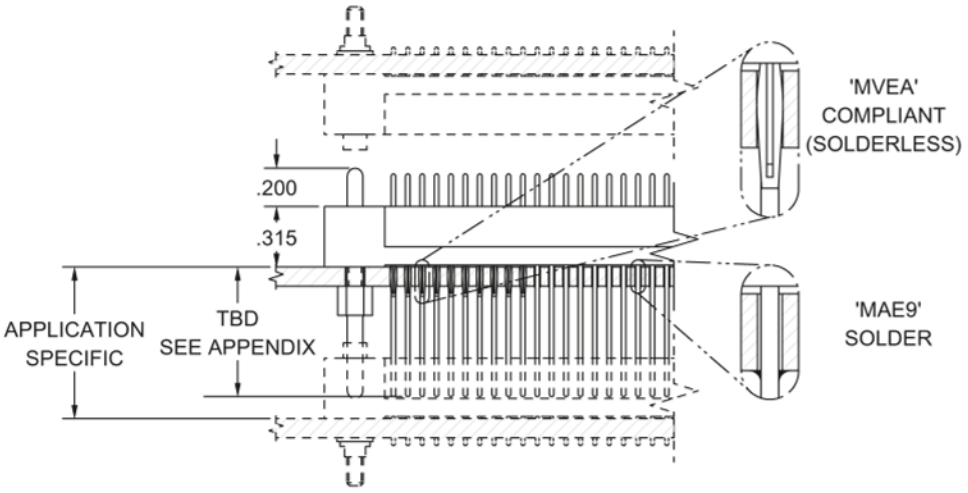

SIZE	A	B	C	D
164	4.020	3.700	1.500	1.850
172	4.170	3.850	1.575	1.925
180	4.320	4.000	1.650	2.000
188	4.470	4.150	1.725	2.075
196	4.620	4.300	1.800	2.150
204	4.770	4.450	1.875	2.225
212	4.920	4.600	1.950	2.300
220	5.070	4.750	2.025	2.375
228	5.220	4.900	2.100	2.450
236	5.370	5.050	2.175	2.525
244	5.520	5.200	2.250	2.600
252	5.670	5.350	2.325	2.675
260	5.820	5.500	2.400	2.750
268	5.970	5.650	2.475	2.825
276	6.120	5.800	2.550	2.900
284	6.270	5.950	2.625	2.975

SIZE	A	B	C	D
292	6.420	6.100	2.700	3.050
300	6.570	6.250	2.775	3.125
308	6.720	6.400	2.850	3.200
316	6.870	6.550	2.925	3.275
324	7.020	6.700	3.000	3.350
332	7.170	6.850	3.075	3.425
340	7.320	7.000	3.150	3.500
348	7.470	7.150	3.225	3.575
356	7.620	7.300	3.300	3.650
364	7.770	7.450	3.375	3.725
372	7.920	7.600	3.450	3.800
380	8.070	7.750	3.525	3.875
388	8.220	7.900	3.600	3.950
396	8.370	8.050	3.675	4.025
404	8.520	8.200	3.750	4.100

REFER TO APPENDIX FOR TERMINATION DETAILS, HARDWARE STYLES, POLARIZATION CHART, AND PWB PATTERNS

PLUG, STRAIGHT
STYLE MBE, MDE, MSE

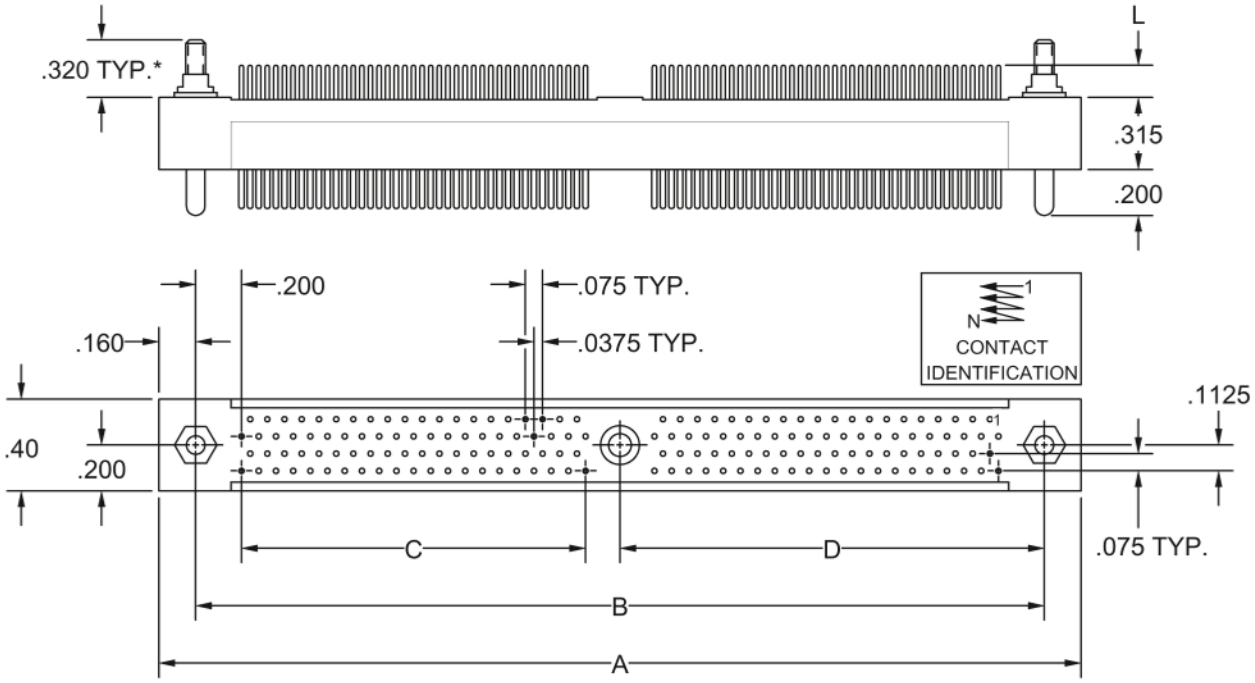

SIZE	A	B	C	D
164	4.020	3.700	1.500	1.850
172	4.170	3.850	1.575	1.925
180	4.320	4.000	1.650	2.000
188	4.470	4.150	1.725	2.075
196	4.620	4.300	1.800	2.150
204	4.770	4.450	1.875	2.225
212	4.920	4.600	1.950	2.300
220	5.070	4.750	2.025	2.375
228	5.220	4.900	2.100	2.450
236	5.370	5.050	2.175	2.525
244	5.520	5.200	2.250	2.600
252	5.670	5.350	2.325	2.675
260	5.820	5.500	2.400	2.750
268	5.970	5.650	2.475	2.825
276	6.120	5.800	2.550	2.900
284	6.270	5.950	2.625	2.975

SIZE	A	B	C	D
292	6.420	6.100	2.700	3.050
300	6.570	6.250	2.775	3.125
308	6.720	6.400	2.850	3.200
316	6.870	6.550	2.925	3.275
324	7.020	6.700	3.000	3.350
332	7.170	6.850	3.075	3.425
340	7.320	7.000	3.150	3.500
348	7.470	7.150	3.225	3.575
356	7.620	7.300	3.300	3.650
364	7.770	7.450	3.375	3.725
372	7.920	7.600	3.450	3.800
380	8.070	7.750	3.525	3.875
388	8.220	7.900	3.600	3.950
396	8.370	8.050	3.675	4.025
404	8.520	8.200	3.750	4.100

REFER TO APPENDIX FOR TERMINATION DETAILS, HARDWARE STYLES, POLARIZATION CHART, AND PWB PATTERNS

PLUG, COMPLIANT
STYLE MVE

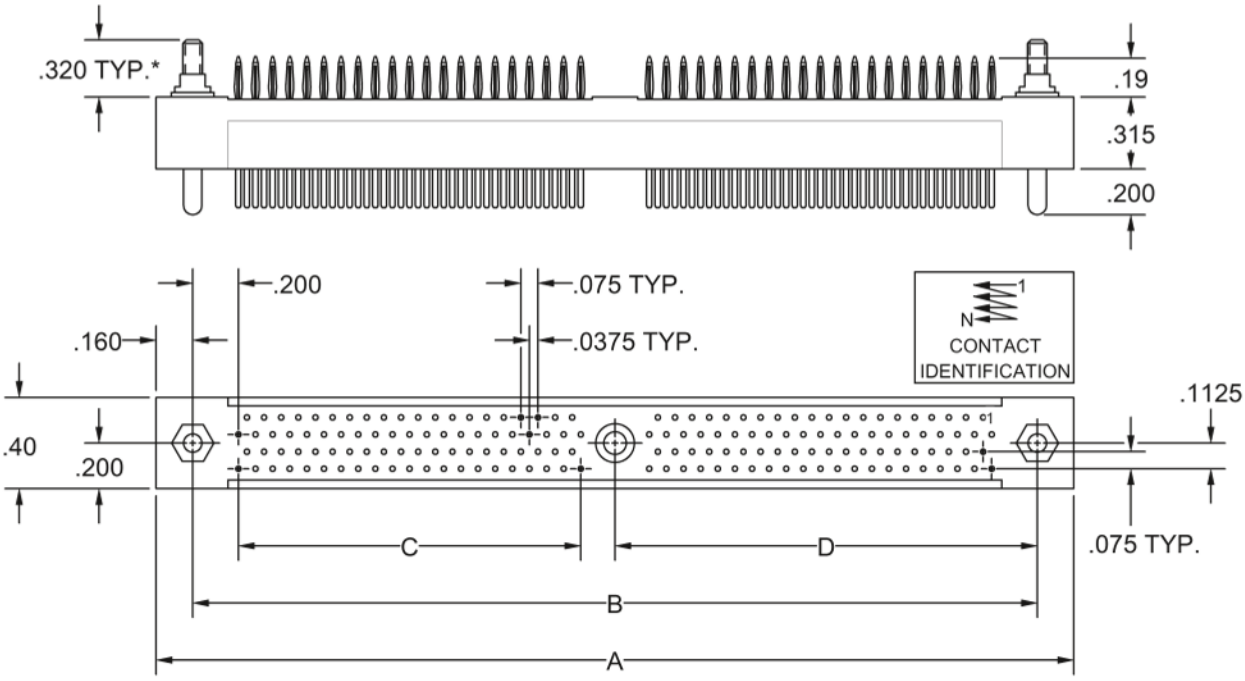

SIZE	A	B	C	D
164	4.020	3.700	1.500	1.850
172	4.170	3.850	1.575	1.925
180	4.320	4.000	1.650	2.000
188	4.470	4.150	1.725	2.075
196	4.620	4.300	1.800	2.150
204	4.770	4.450	1.875	2.225
212	4.920	4.600	1.950	2.300
220	5.070	4.750	2.025	2.375
228	5.220	4.900	2.100	2.450
236	5.370	5.050	2.175	2.525
244	5.520	5.200	2.250	2.600
252	5.670	5.350	2.325	2.675
260	5.820	5.500	2.400	2.750
268	5.970	5.650	2.475	2.825
276	6.120	5.800	2.550	2.900
284	6.270	5.950	2.625	2.975

SIZE	A	B	C	D
292	6.420	6.100	2.700	3.050
300	6.570	6.250	2.775	3.125
308	6.720	6.400	2.850	3.200
316	6.870	6.550	2.925	3.275
324	7.020	6.700	3.000	3.350
332	7.170	6.850	3.075	3.425
340	7.320	7.000	3.150	3.500
348	7.470	7.150	3.225	3.575
356	7.620	7.300	3.300	3.650
364	7.770	7.450	3.375	3.725
372	7.920	7.600	3.450	3.800
380	8.070	7.750	3.525	3.875
388	8.220	7.900	3.600	3.950
396	8.370	8.050	3.675	4.025
404	8.520	8.200	3.750	4.100

SHIELD OPTION

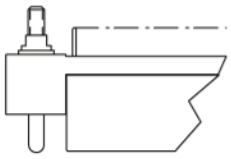

CONTACT FACTORY FOR VARIATION CODE ASSIGNMENT

REFER TO APPENDIX FOR TERMINATION DETAILS, HARDWARE STYLES, POLARIZATION CHART, AND PWB PATTERNS

PLUG, STRAIGHT, LOW PROFILE
STYLE RBE, RDE, RSE

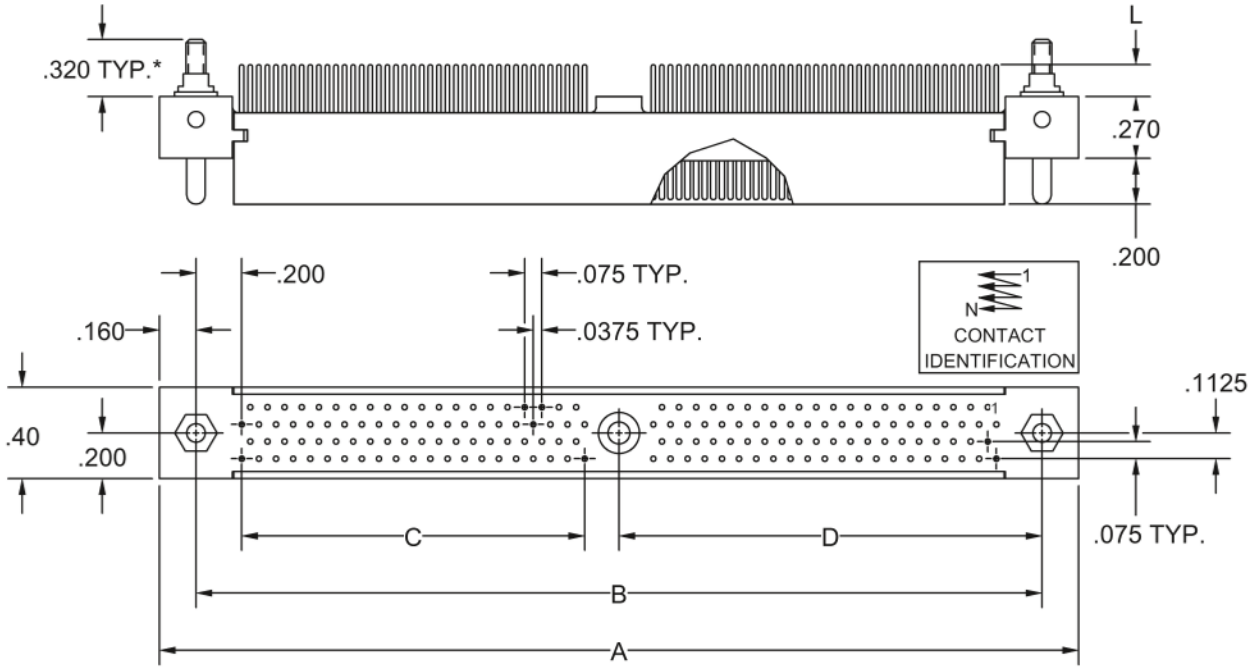

SIZE	A	B	C	D
164	4.020	3.700	1.500	1.850
172	4.170	3.850	1.575	1.925
180	4.320	4.000	1.650	2.000
188	4.470	4.150	1.725	2.075
196	4.620	4.300	1.800	2.150
204	4.770	4.450	1.875	2.225
212	4.920	4.600	1.950	2.300
220	5.070	4.750	2.025	2.375
228	5.220	4.900	2.100	2.450
236	5.370	5.050	2.175	2.525
244	5.520	5.200	2.250	2.600
252	5.670	5.350	2.325	2.675
260	5.820	5.500	2.400	2.750
268	5.970	5.650	2.475	2.825
276	6.120	5.800	2.550	2.900
284	6.270	5.950	2.625	2.975

SIZE	A	B	C	D
292	6.420	6.100	2.700	3.050
300	6.570	6.250	2.775	3.125
308	6.720	6.400	2.850	3.200
316	6.870	6.550	2.925	3.275
324	7.020	6.700	3.000	3.350
332	7.170	6.850	3.075	3.425
340	7.320	7.000	3.150	3.500
348	7.470	7.150	3.225	3.575
356	7.620	7.300	3.300	3.650
364	7.770	7.450	3.375	3.725
372	7.920	7.600	3.450	3.800
380	8.070	7.750	3.525	3.875
388	8.220	7.900	3.600	3.950
396	8.370	8.050	3.675	4.025
404	8.520	8.200	3.750	4.100

REFER TO APPENDIX FOR TERMINATION DETAILS, HARDWARE STYLES, POLARIZATION CHART, AND PWB PATTERNS

PLUG, RIGHT ANGLE, LOW PROFILE
STYLE MEE

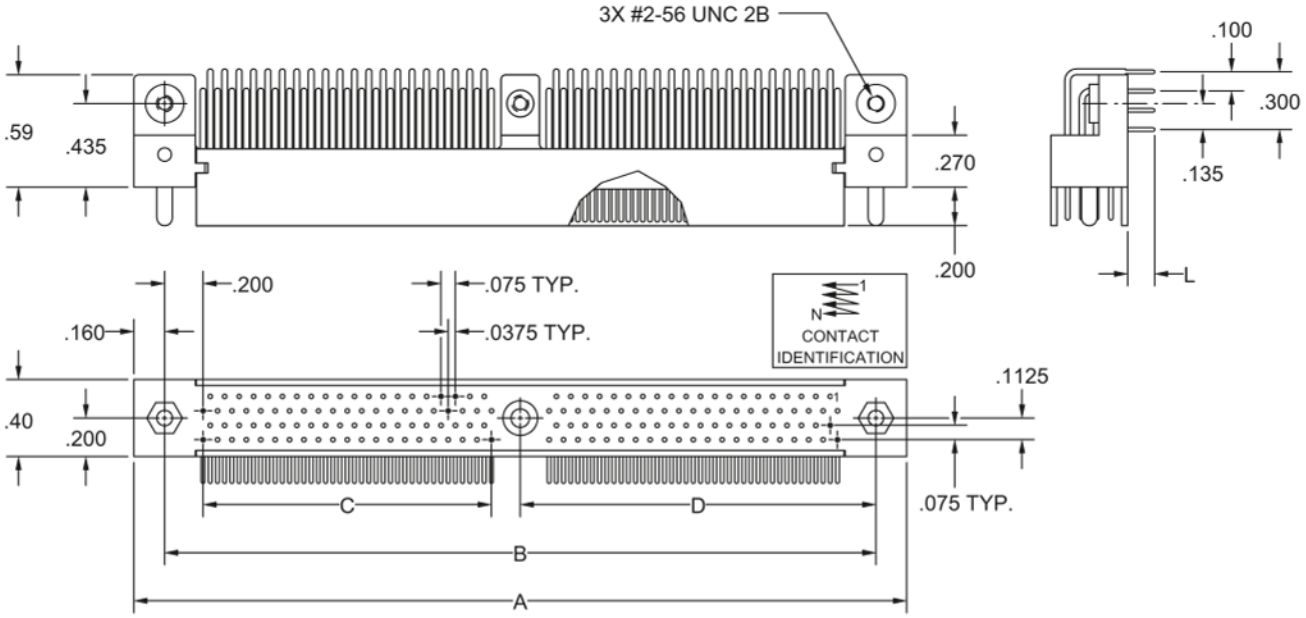

SIZE	A	B	C	D
164	4.020	3.700	1.500	1.850
172	4.170	3.850	1.575	1.925
180	4.320	4.000	1.650	2.000
188	4.470	4.150	1.725	2.075
196	4.620	4.300	1.800	2.150
204	4.770	4.450	1.875	2.225
212	4.920	4.600	1.950	2.300
220	5.070	4.750	2.025	2.375
228	5.220	4.900	2.100	2.450
236	5.370	5.050	2.175	2.525
244	5.520	5.200	2.250	2.600
252	5.670	5.350	2.325	2.675
260	5.820	5.500	2.400	2.750
268	5.970	5.650	2.475	2.825
276	6.120	5.800	2.550	2.900
284	6.270	5.950	2.625	2.975

SIZE	A	B	C	D
292	6.420	6.100	2.700	3.050
300	6.570	6.250	2.775	3.125
308	6.720	6.400	2.850	3.200
316	6.870	6.550	2.925	3.275
324	7.020	6.700	3.000	3.350
332	7.170	6.850	3.075	3.425
340	7.320	7.000	3.150	3.500
348	7.470	7.150	3.225	3.575
356	7.620	7.300	3.300	3.650
364	7.770	7.450	3.375	3.725
372	7.920	7.600	3.450	3.800
380	8.070	7.750	3.525	3.875
388	8.220	7.900	3.600	3.950
396	8.370	8.050	3.675	4.025
404	8.520	8.200	3.750	4.100

REFER TO APPENDIX FOR TERMINATION DETAILS, HARDWARE STYLES, POLARIZATION CHART, AND PWB PATTERNS

PLUG, SURFACE MOUNT, LOW PROFILE
STYLE MRE

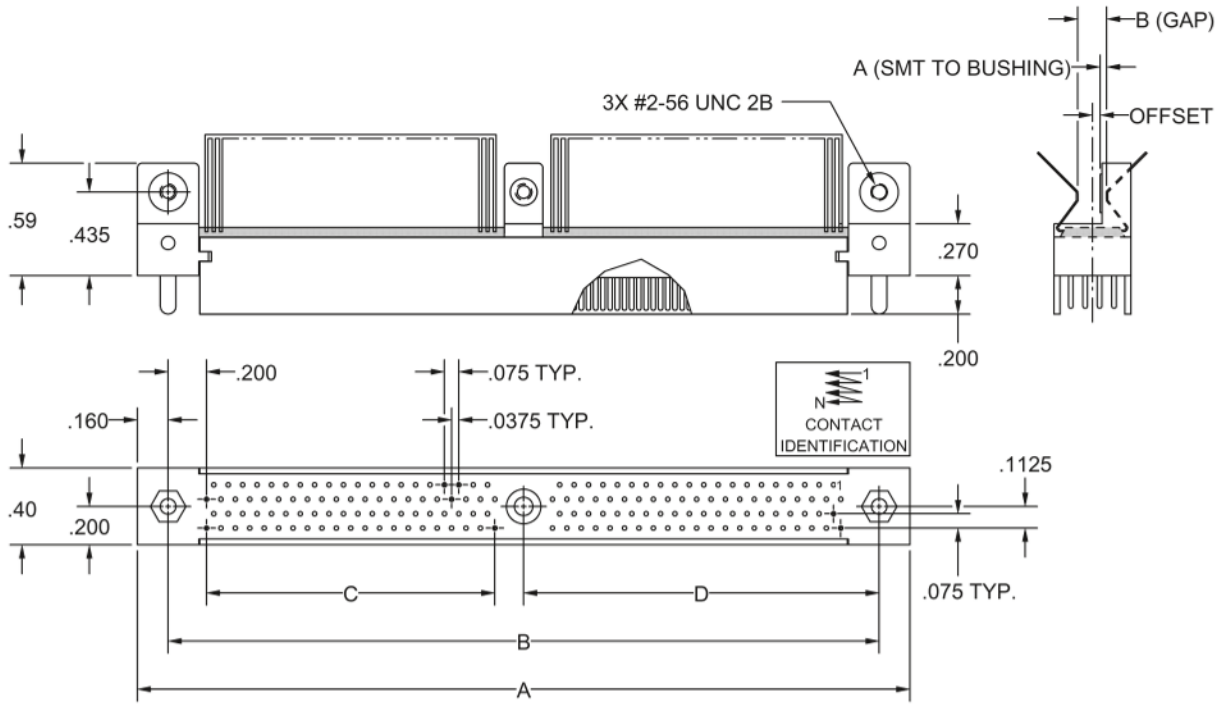

SIZE	A	B	C	D
164	4.020	3.700	1.500	1.850
172	4.170	3.850	1.575	1.925
180	4.320	4.000	1.650	2.000
188	4.470	4.150	1.725	2.075
196	4.620	4.300	1.800	2.150
204	4.770	4.450	1.875	2.225
212	4.920	4.600	1.950	2.300
220	5.070	4.750	2.025	2.375
228	5.220	4.900	2.100	2.450
236	5.370	5.050	2.175	2.525
244	5.520	5.200	2.250	2.600
252	5.670	5.350	2.325	2.675
260	5.820	5.500	2.400	2.750
268	5.970	5.650	2.475	2.825
276	6.120	5.800	2.550	2.900
284	6.270	5.950	2.625	2.975

SIZE	A	B	C	D
292	6.420	6.100	2.700	3.050
300	6.570	6.250	2.775	3.125
308	6.720	6.400	2.850	3.200
316	6.870	6.550	2.925	3.275
324	7.020	6.700	3.000	3.350
332	7.170	6.850	3.075	3.425
340	7.320	7.000	3.150	3.500
348	7.470	7.150	3.225	3.575
356	7.620	7.300	3.300	3.650
364	7.770	7.450	3.375	3.725
372	7.920	7.600	3.450	3.800
380	8.070	7.750	3.525	3.875
388	8.220	7.900	3.600	3.950
396	8.370	8.050	3.675	4.025
404	8.520	8.200	3.750	4.100

REFER TO APPENDIX FOR TERMINATION DETAILS, HARDWARE STYLES, POLARIZATION CHART, AND PWB PATTERNS

RECEPTACLE, STACKING
STYLE FAE9, FVEA

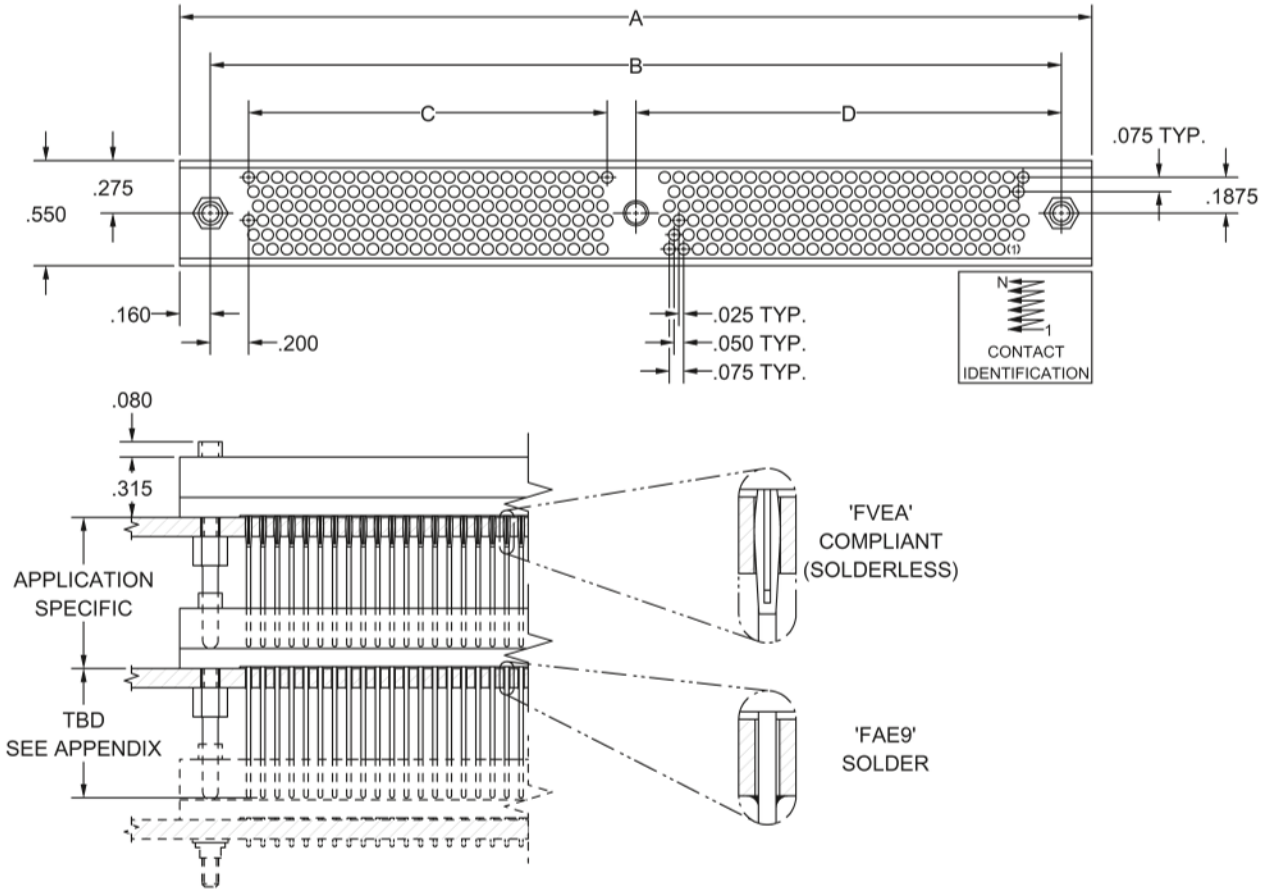

SIZE	A	B	C	D
304	4.770	4.450	1.875	2.225
316	4.920	4.600	1.950	2.300
328	5.070	4.750	2.025	2.375
340	5.220	4.900	2.100	2.450
352	5.370	5.050	2.175	2.525
364	5.520	5.200	2.250	2.600
376	5.670	5.350	2.325	2.675
388	5.820	5.500	2.400	2.750
400	5.970	5.650	2.475	2.825
412	6.120	5.800	2.550	2.900
424	6.270	5.950	2.625	2.975
436	6.420	6.100	2.700	3.050
448	6.570	6.250	2.775	3.125

SIZE	A	B	C	D
460	6.720	6.400	2.850	3.200
472	6.870	6.550	2.925	3.275
484	7.020	6.700	3.000	3.350
496	7.170	6.850	3.075	3.425
508	7.320	7.000	3.150	3.500
520	7.470	7.150	3.225	3.575
532	7.620	7.300	3.300	3.650
544	7.770	7.450	3.375	3.725
556	7.920	7.600	3.450	3.800
568	8.070	7.750	3.525	3.875
580	8.220	7.900	3.600	3.950
592	8.370	8.050	3.675	4.025
604	8.520	8.200	3.750	4.100

REFER TO APPENDIX FOR TERMINATION DETAILS, HARDWARE STYLES, POLARIZATION CHART, AND PWB PATTERNS

RECEPTACLE, STRAIGHT
STYLE FBE, FDE, FSE, FWE

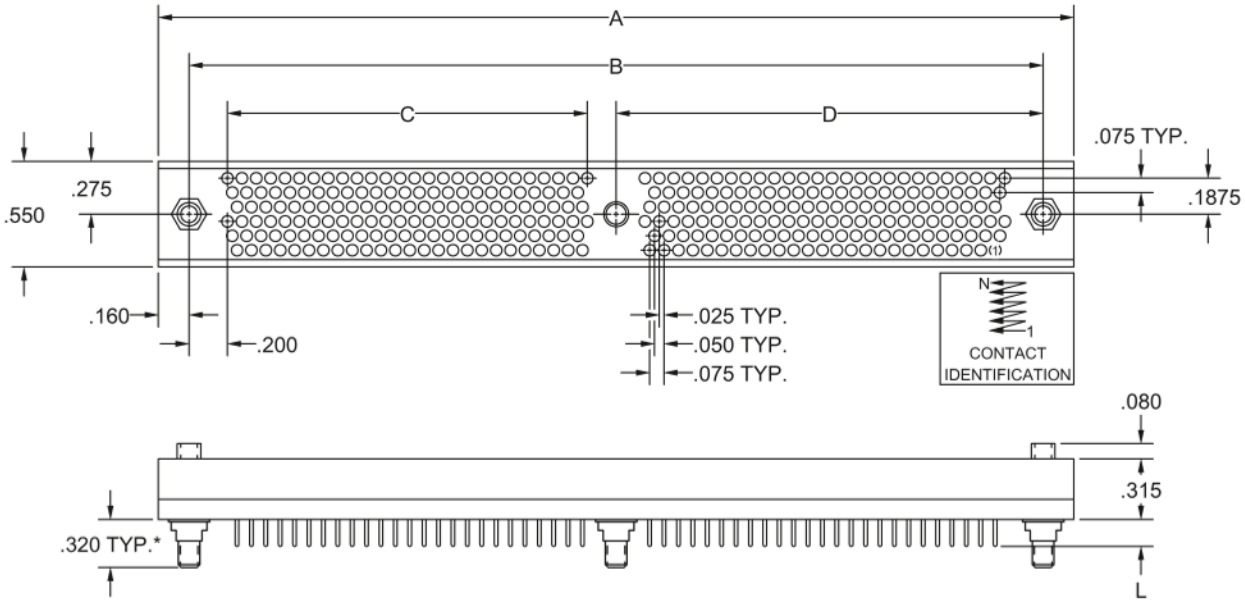

SIZE	A	B	C	D
304	4.770	4.450	1.875	2.225
316	4.920	4.600	1.950	2.300
328	5.070	4.750	2.025	2.375
340	5.220	4.900	2.100	2.450
352	5.370	5.050	2.175	2.525
364	5.520	5.200	2.250	2.600
376	5.670	5.350	2.325	2.675
388	5.820	5.500	2.400	2.750
400	5.970	5.650	2.475	2.825
412	6.120	5.800	2.550	2.900
424	6.270	5.950	2.625	2.975
436	6.420	6.100	2.700	3.050
448	6.570	6.250	2.775	3.125

SIZE	A	B	C	D
460	6.720	6.400	2.850	3.200
472	6.870	6.550	2.925	3.275
484	7.020	6.700	3.000	3.350
496	7.170	6.850	3.075	3.425
508	7.320	7.000	3.150	3.500
520	7.470	7.150	3.225	3.575
532	7.620	7.300	3.300	3.650
544	7.770	7.450	3.375	3.725
556	7.920	7.600	3.450	3.800
568	8.070	7.750	3.525	3.875
580	8.220	7.900	3.600	3.950
592	8.370	8.050	3.675	4.025
604	8.520	8.200	3.750	4.100

REFER TO APPENDIX FOR TERMINATION DETAILS, HARDWARE STYLES, POLARIZATION CHART, AND PWB PATTERNS

RECEPTACLE, RIGHT ANGLE
STYLE FEE

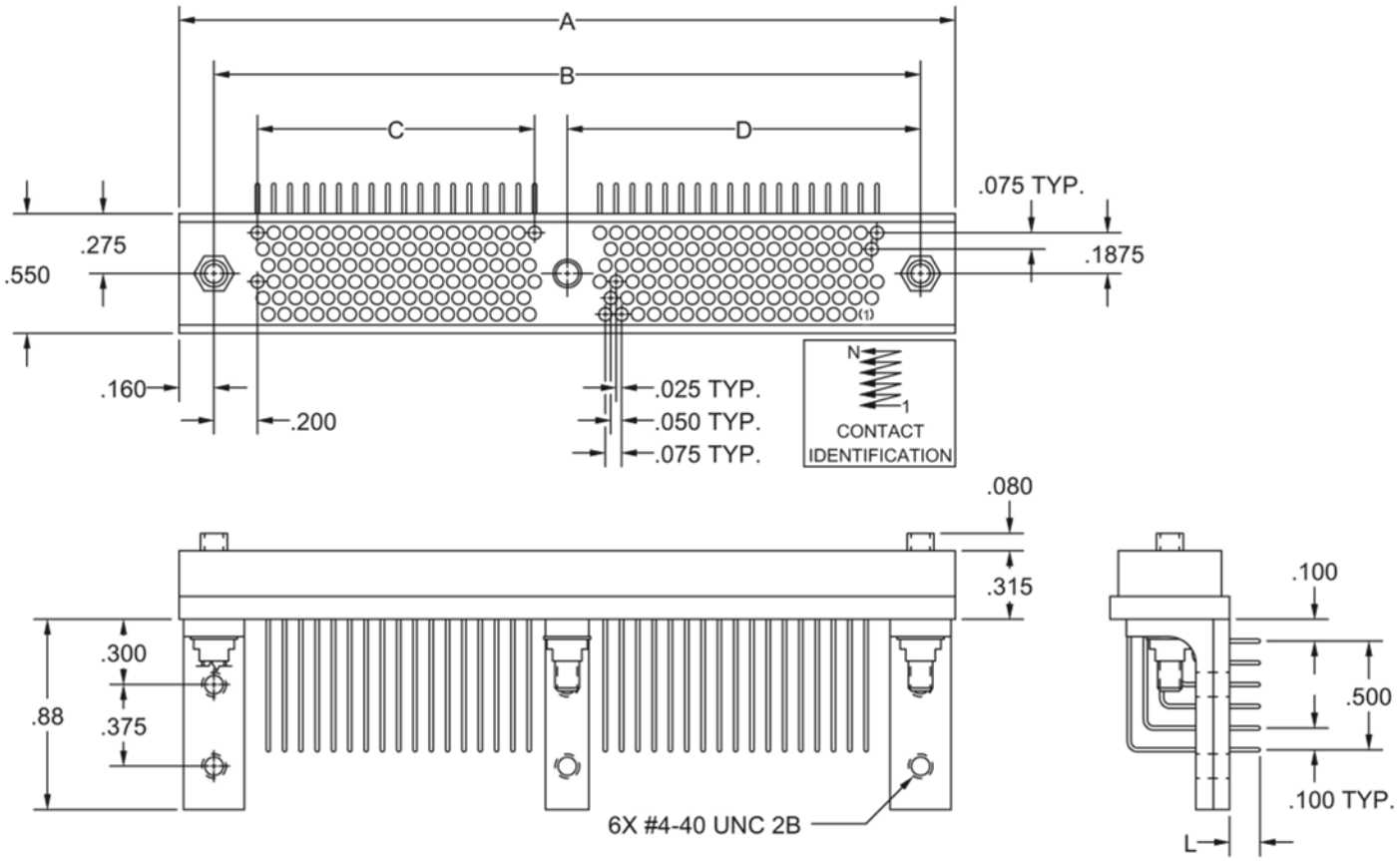

SIZE	A	B	C	D
304	4.770	4.450	1.875	2.225
316	4.920	4.600	1.950	2.300
328	5.070	4.750	2.025	2.375
340	5.220	4.900	2.100	2.450
352	5.370	5.050	2.175	2.525
364	5.520	5.200	2.250	2.600
376	5.670	5.350	2.325	2.675
388	5.820	5.500	2.400	2.750
400	5.970	5.650	2.475	2.825
412	6.120	5.800	2.550	2.900
424	6.270	5.950	2.625	2.975
436	6.420	6.100	2.700	3.050
448	6.570	6.250	2.775	3.125

SIZE	A	B	C	D
460	6.720	6.400	2.850	3.200
472	6.870	6.550	2.925	3.275
484	7.020	6.700	3.000	3.350
496	7.170	6.850	3.075	3.425
508	7.320	7.000	3.150	3.500
520	7.470	7.150	3.225	3.575
532	7.620	7.300	3.300	3.650
544	7.770	7.450	3.375	3.725
556	7.920	7.600	3.450	3.800
568	8.070	7.750	3.525	3.875
580	8.220	7.900	3.600	3.950
592	8.370	8.050	3.675	4.025
604	8.520	8.200	3.750	4.100

REFER TO APPENDIX FOR TERMINATION DETAILS, HARDWARE STYLES, POLARIZATION CHART, AND PWB PATTERNS

RECEPTACLE, COMPLIANT
STYLE FVE

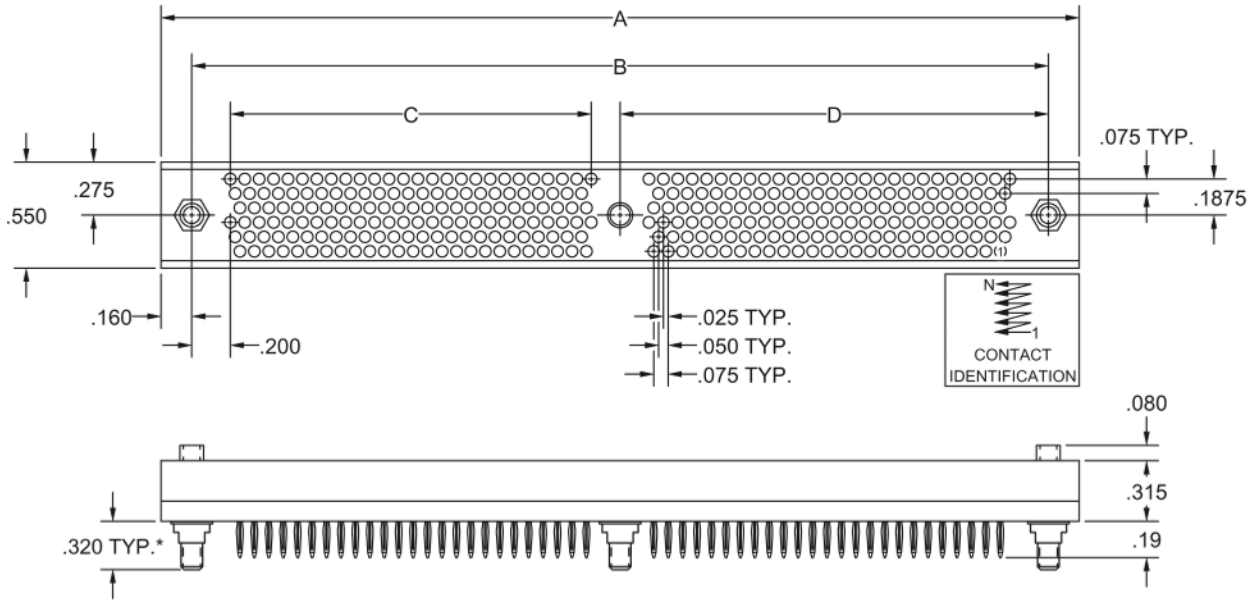

SIZE	A	B	C	D
304	4.770	4.450	1.875	2.225
316	4.920	4.600	1.950	2.300
328	5.070	4.750	2.025	2.375
340	5.220	4.900	2.100	2.450
352	5.370	5.050	2.175	2.525
364	5.520	5.200	2.250	2.600
376	5.670	5.350	2.325	2.675
388	5.820	5.500	2.400	2.750
400	5.970	5.650	2.475	2.825
412	6.120	5.800	2.550	2.900
424	6.270	5.950	2.625	2.975
436	6.420	6.100	2.700	3.050
448	6.570	6.250	2.775	3.125

SIZE	A	B	C	D
460	6.720	6.400	2.850	3.200
472	6.870	6.550	2.925	3.275
484	7.020	6.700	3.000	3.350
496	7.170	6.850	3.075	3.425
508	7.320	7.000	3.150	3.500
520	7.470	7.150	3.225	3.575
532	7.620	7.300	3.300	3.650
544	7.770	7.450	3.375	3.725
556	7.920	7.600	3.450	3.800
568	8.070	7.750	3.525	3.875
580	8.220	7.900	3.600	3.950
592	8.370	8.050	3.675	4.025
604	8.520	8.200	3.750	4.100

REFER TO APPENDIX FOR TERMINATION DETAILS, HARDWARE STYLES, POLARIZATION CHART, AND PWB PATTERNS

PLUG, STACKING
STYLE MAE9, MVEA

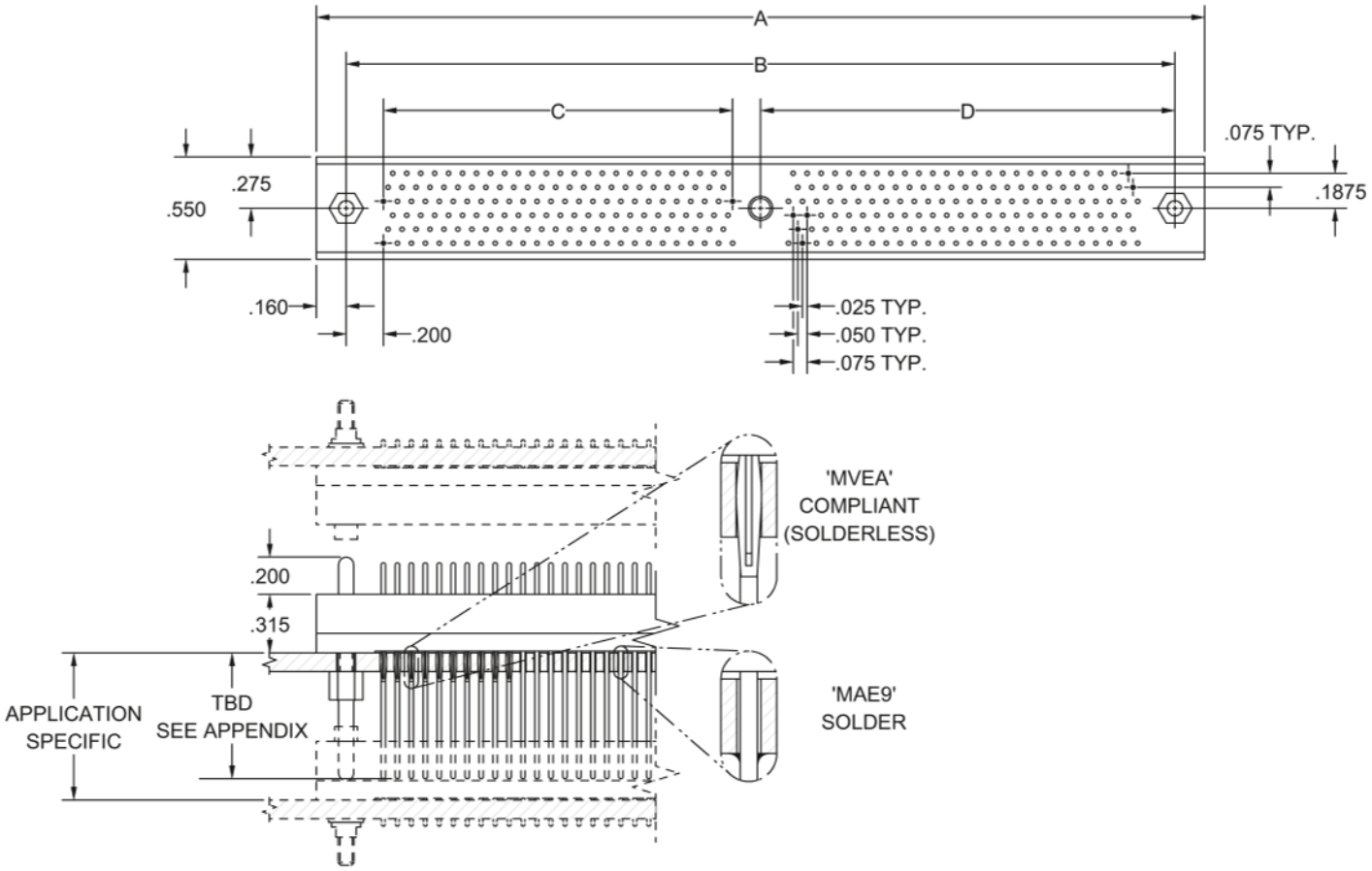

SIZE	A	B	C	D
304	4.770	4.450	1.875	2.225
316	4.920	4.600	1.950	2.300
328	5.070	4.750	2.025	2.375
340	5.220	4.900	2.100	2.450
352	5.370	5.050	2.175	2.525
364	5.520	5.200	2.250	2.600
376	5.670	5.350	2.325	2.675
388	5.820	5.500	2.400	2.750
400	5.970	5.650	2.475	2.825
412	6.120	5.800	2.550	2.900
424	6.270	5.950	2.625	2.975
436	6.420	6.100	2.700	3.050
448	6.570	6.250	2.775	3.125

SIZE	A	B	C	D
460	6.720	6.400	2.850	3.200
472	6.870	6.550	2.925	3.275
484	7.020	6.700	3.000	3.350
496	7.170	6.850	3.075	3.425
508	7.320	7.000	3.150	3.500
520	7.470	7.150	3.225	3.575
532	7.620	7.300	3.300	3.650
544	7.770	7.450	3.375	3.725
556	7.920	7.600	3.450	3.800
568	8.070	7.750	3.525	3.875
580	8.220	7.900	3.600	3.950
592	8.370	8.050	3.675	4.025
604	8.520	8.200	3.750	4.100

REFER TO APPENDIX FOR TERMINATION DETAILS, HARDWARE STYLES, POLARIZATION CHART, AND PWB PATTERNS

PLUG, STRAIGHT
STYLE MBE, MDE, MSE

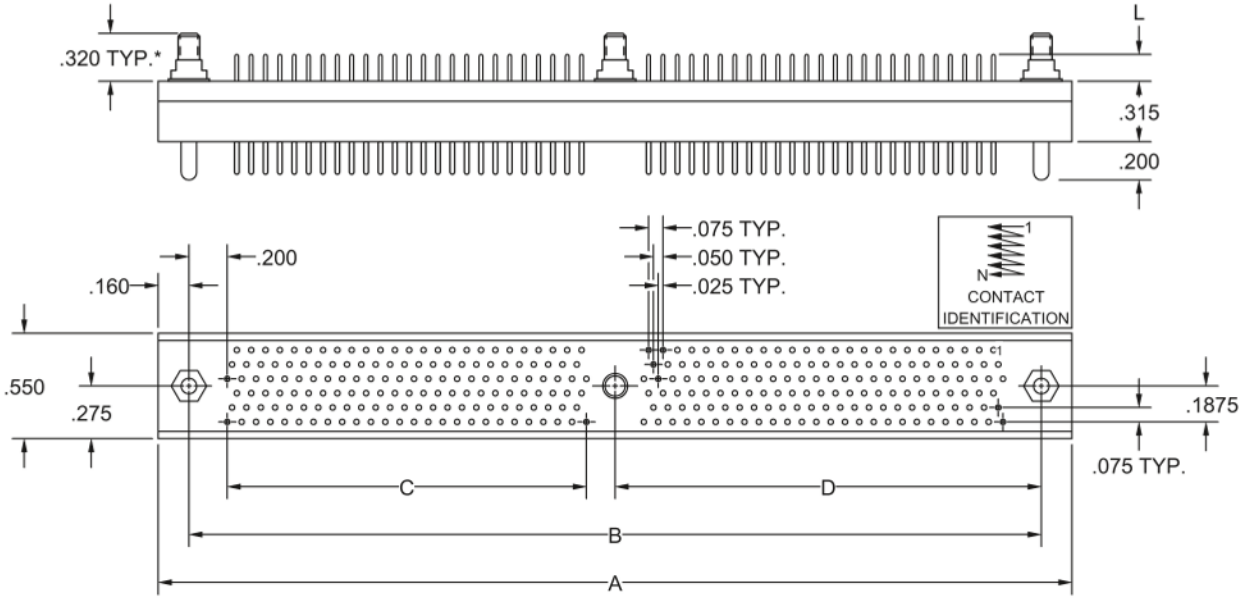

SIZE	A	B	C	D
304	4.770	4.450	1.875	2.225
316	4.920	4.600	1.950	2.300
328	5.070	4.750	2.025	2.375
340	5.220	4.900	2.100	2.450
352	5.370	5.050	2.175	2.525
364	5.520	5.200	2.250	2.600
376	5.670	5.350	2.325	2.675
388	5.820	5.500	2.400	2.750
400	5.970	5.650	2.475	2.825
412	6.120	5.800	2.550	2.900
424	6.270	5.950	2.625	2.975
436	6.420	6.100	2.700	3.050
448	6.570	6.250	2.775	3.125

SIZE	A	B	C	D
460	6.720	6.400	2.850	3.200
472	6.870	6.550	2.925	3.275
484	7.020	6.700	3.000	3.350
496	7.170	6.850	3.075	3.425
508	7.320	7.000	3.150	3.500
520	7.470	7.150	3.225	3.575
532	7.620	7.300	3.300	3.650
544	7.770	7.450	3.375	3.725
556	7.920	7.600	3.450	3.800
568	8.070	7.750	3.525	3.875
580	8.220	7.900	3.600	3.950
592	8.370	8.050	3.675	4.025
604	8.520	8.200	3.750	4.100

REFER TO APPENDIX FOR TERMINATION DETAILS, HARDWARE STYLES, POLARIZATION CHART, AND PWB PATTERNS

PLUG, COMPLIANT
STYLE MVE

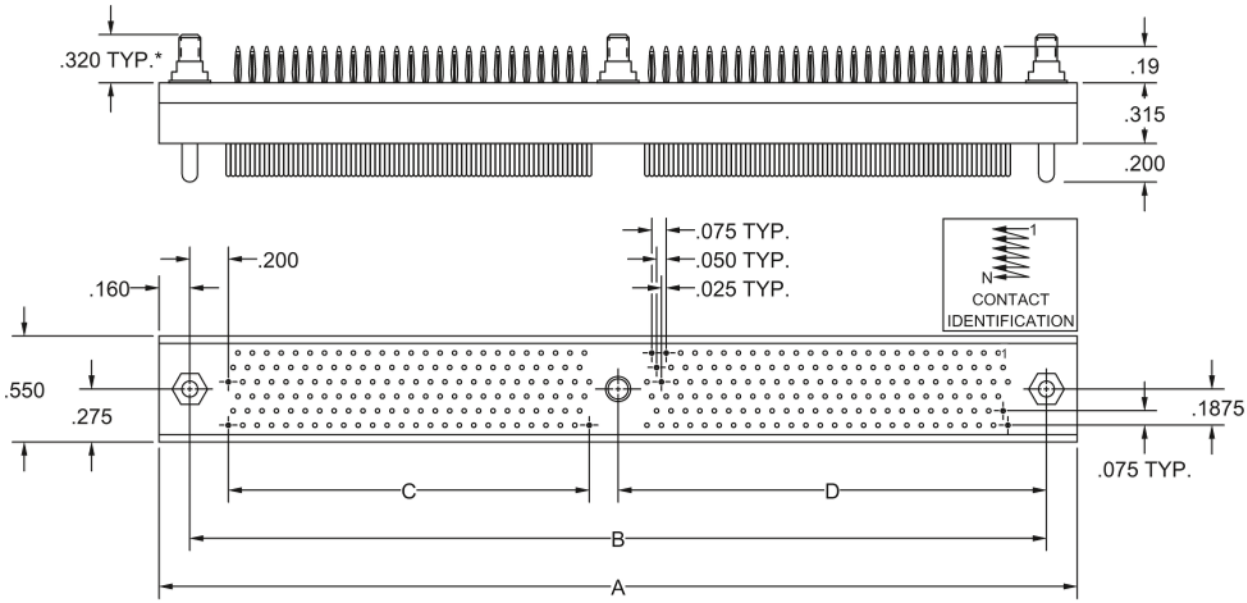

SIZE	A	B	C	D
304	4.770	4.450	1.875	2.225
316	4.920	4.600	1.950	2.300
328	5.070	4.750	2.025	2.375
340	5.220	4.900	2.100	2.450
352	5.370	5.050	2.175	2.525
364	5.520	5.200	2.250	2.600
376	5.670	5.350	2.325	2.675
388	5.820	5.500	2.400	2.750
400	5.970	5.650	2.475	2.825
412	6.120	5.800	2.550	2.900
424	6.270	5.950	2.625	2.975
436	6.420	6.100	2.700	3.050
448	6.570	6.250	2.775	3.125

SIZE	A	B	C	D
460	6.720	6.400	2.850	3.200
472	6.870	6.550	2.925	3.275
484	7.020	6.700	3.000	3.350
496	7.170	6.850	3.075	3.425
508	7.320	7.000	3.150	3.500
520	7.470	7.150	3.225	3.575
532	7.620	7.300	3.300	3.650
544	7.770	7.450	3.375	3.725
556	7.920	7.600	3.450	3.800
568	8.070	7.750	3.525	3.875
580	8.220	7.900	3.600	3.950
592	8.370	8.050	3.675	4.025
604	8.520	8.200	3.750	4.100

REFER TO APPENDIX FOR TERMINATION DETAILS, HARDWARE STYLES, POLARIZATION CHART, AND PWB PATTERNS

PLUG, STRAIGHT, LOW PROFILE
STYLE RBE, RDE, RSE

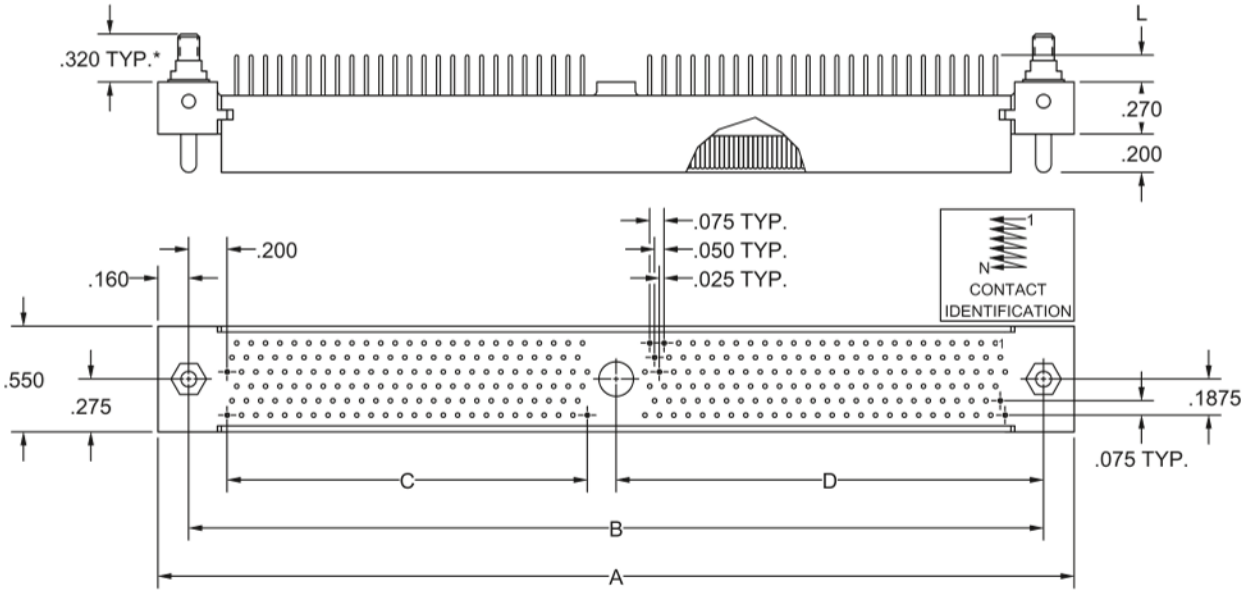

SIZE	A	B	C	D
304	4.770	4.450	1.875	2.225
316	4.920	4.600	1.950	2.300
328	5.070	4.750	2.025	2.375
340	5.220	4.900	2.100	2.450
352	5.370	5.050	2.175	2.525
364	5.520	5.200	2.250	2.600
376	5.670	5.350	2.325	2.675
388	5.820	5.500	2.400	2.750
400	5.970	5.650	2.475	2.825
412	6.120	5.800	2.550	2.900
424	6.270	5.950	2.625	2.975
436	6.420	6.100	2.700	3.050
448	6.570	6.250	2.775	3.125

SIZE	A	B	C	D
460	6.720	6.400	2.850	3.200
472	6.870	6.550	2.925	3.275
484	7.020	6.700	3.000	3.350
496	7.170	6.850	3.075	3.425
508	7.320	7.000	3.150	3.500
520	7.470	7.150	3.225	3.575
532	7.620	7.300	3.300	3.650
544	7.770	7.450	3.375	3.725
556	7.920	7.600	3.450	3.800
568	8.070	7.750	3.525	3.875
580	8.220	7.900	3.600	3.950
592	8.370	8.050	3.675	4.025
604	8.520	8.200	3.750	4.100

REFER TO APPENDIX FOR TERMINATION DETAILS, HARDWARE STYLES, POLARIZATION CHART, AND PWB PATTERNS

PLUG, RIGHT ANGLE, LOW PROFILE
STYLE MEE

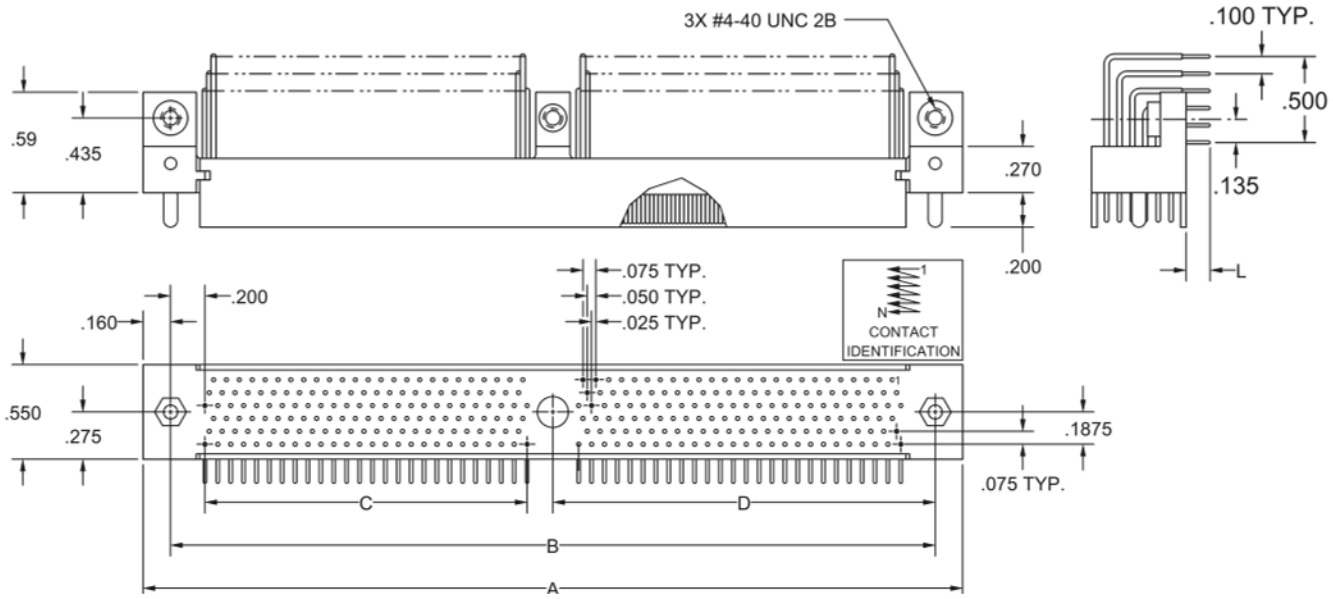

SIZE	A	B	C	D
304	4.770	4.450	1.875	2.225
316	4.920	4.600	1.950	2.300
328	5.070	4.750	2.025	2.375
340	5.220	4.900	2.100	2.450
352	5.370	5.050	2.175	2.525
364	5.520	5.200	2.250	2.600
376	5.670	5.350	2.325	2.675
388	5.820	5.500	2.400	2.750
400	5.970	5.650	2.475	2.825
412	6.120	5.800	2.550	2.900
424	6.270	5.950	2.625	2.975
436	6.420	6.100	2.700	3.050
448	6.570	6.250	2.775	3.125

SIZE	A	B	C	D
460	6.720	6.400	2.850	3.200
472	6.870	6.550	2.925	3.275
484	7.020	6.700	3.000	3.350
496	7.170	6.850	3.075	3.425
508	7.320	7.000	3.150	3.500
520	7.470	7.150	3.225	3.575
532	7.620	7.300	3.300	3.650
544	7.770	7.450	3.375	3.725
556	7.920	7.600	3.450	3.800
568	8.070	7.750	3.525	3.875
580	8.220	7.900	3.600	3.950
592	8.370	8.050	3.675	4.025
604	8.520	8.200	3.750	4.100

REFER TO APPENDIX FOR TERMINATION DETAILS, HARDWARE STYLES, POLARIZATION CHART, AND PWB PATTERNS

PLUG, SURFACE MOUNT, LOW PROFILE
STYLE MRE

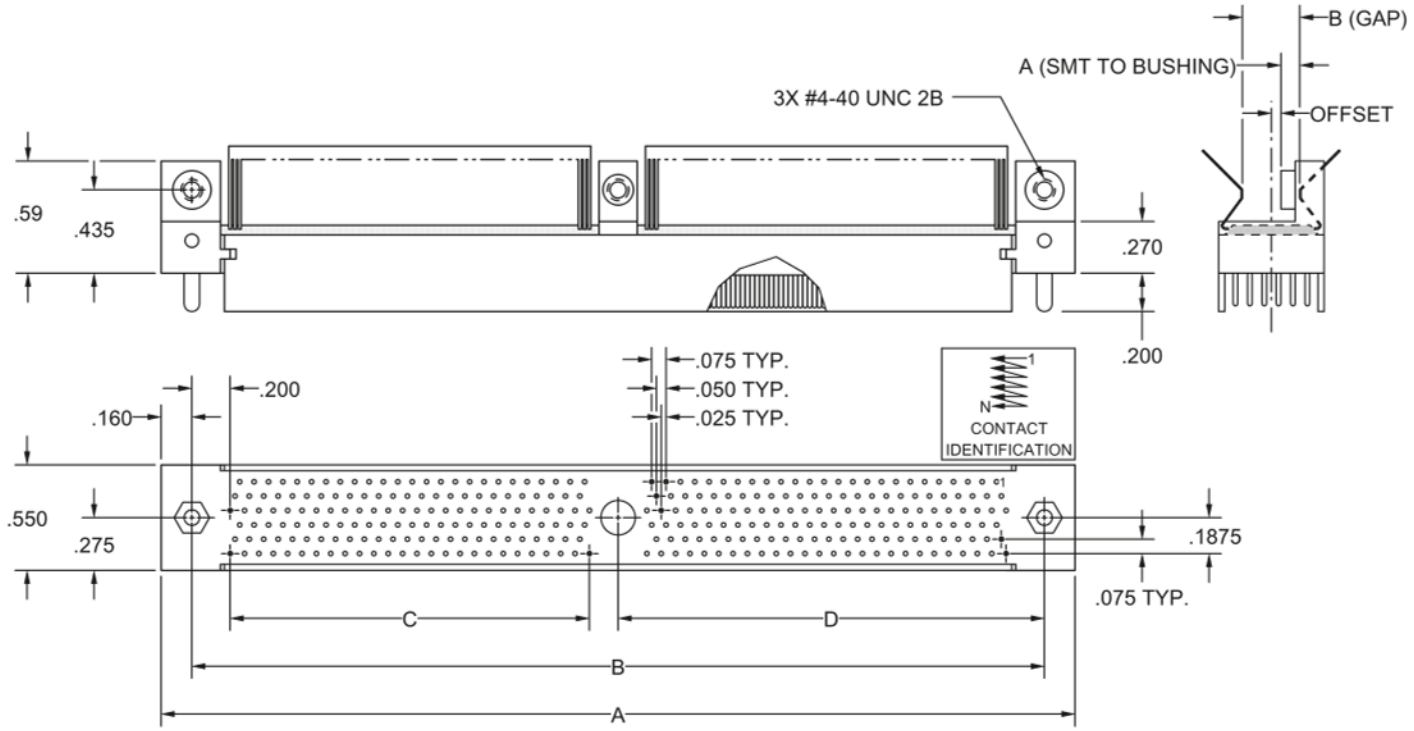

SIZE	A	B	C	D
304	4.770	4.450	1.875	2.225
316	4.920	4.600	1.950	2.300
328	5.070	4.750	2.025	2.375
340	5.220	4.900	2.100	2.450
352	5.370	5.050	2.175	2.525
364	5.520	5.200	2.250	2.600
376	5.670	5.350	2.325	2.675
388	5.820	5.500	2.400	2.750
400	5.970	5.650	2.475	2.825
412	6.120	5.800	2.550	2.900
424	6.270	5.950	2.625	2.975
436	6.420	6.100	2.700	3.050
448	6.570	6.250	2.775	3.125

SIZE	A	B	C	D
460	6.720	6.400	2.850	3.200
472	6.870	6.550	2.925	3.275
484	7.020	6.700	3.000	3.350
496	7.170	6.850	3.075	3.425
508	7.320	7.000	3.150	3.500
520	7.470	7.150	3.225	3.575
532	7.620	7.300	3.300	3.650
544	7.770	7.450	3.375	3.725
556	7.920	7.600	3.450	3.800
568	8.070	7.750	3.525	3.875
580	8.220	7.900	3.600	3.950
592	8.370	8.050	3.675	4.025
604	8.520	8.200	3.750	4.100

REFER TO APPENDIX FOR TERMINATION DETAILS, HARDWARE STYLES, POLARIZATION CHART, AND PWB PATTERNS

ORDERING CHART
8-ROW

HMM	156	FDE	1	X	99	E	800

Series

Contact Capacity
(Use All 3 Places)

Body Style	
Receptacle	
FAE	Stacking
FBE	Flex Cable
FDE	Dip Solder Straight
FSE	Solder Cup
FVE	Compliant
FWE	Wire Wrap
Plug	
MAE	Stacking
MBE	Flex Cable
MDE	Dip Solder Straight
MSE	Solder Cup
MVE	Compliant
MWE	Wire Wrap
MEE	Dip Solder Right Angle

Termination Length - "L"			
Code	Dip Solder	Wire Wrap	Flex
1	.109	.375	.050
2	.140	.500	.098
3	.172	.625	-
4	.234	-	-
9	User Defined		
0	Use For Solder Cup & Compliant Without Extension		
A	Use For Compliant With Stacking Extension		

Variation Code - Factory Assigned	
820	Solder Dip Terminals
8C0	Epoxy Termination Sealed
8C2	Epoxy Sealed & Solder Dipped

Mounting Style	
C	Threaded Insert
E	Threaded Stud
0	No Mount Provision
Check Factory. Not All Styles Are Available In All Configurations.	

Hardware Arrangement	
00	Assembled as "01" without Loctite
01 - 64	Y - "D" Shaped Guides (Loctite)
65 - 68	Universal
69 - 72	See Appendix
97	2 Male Guides Unassembled
98	2 Female Guides Unassembled
99	1 Male & Female Unassembled

Hardware Style	
A	Round Guide with Mtg. Stud
B	"D" Shaped with Mtg. Stud (Polarizing)
H	Short Rotating (.078 Hex)
K	Fixed Locking
M	Medium Rotating (Slotted)
T	Fixed Locking with Stud
X	Round Guides
Y	"D" Shaped Guides (Polarizing)
0	No Hardware Supplied

RECEPTACLE, STACKING
STYLE FAE9, FVEA

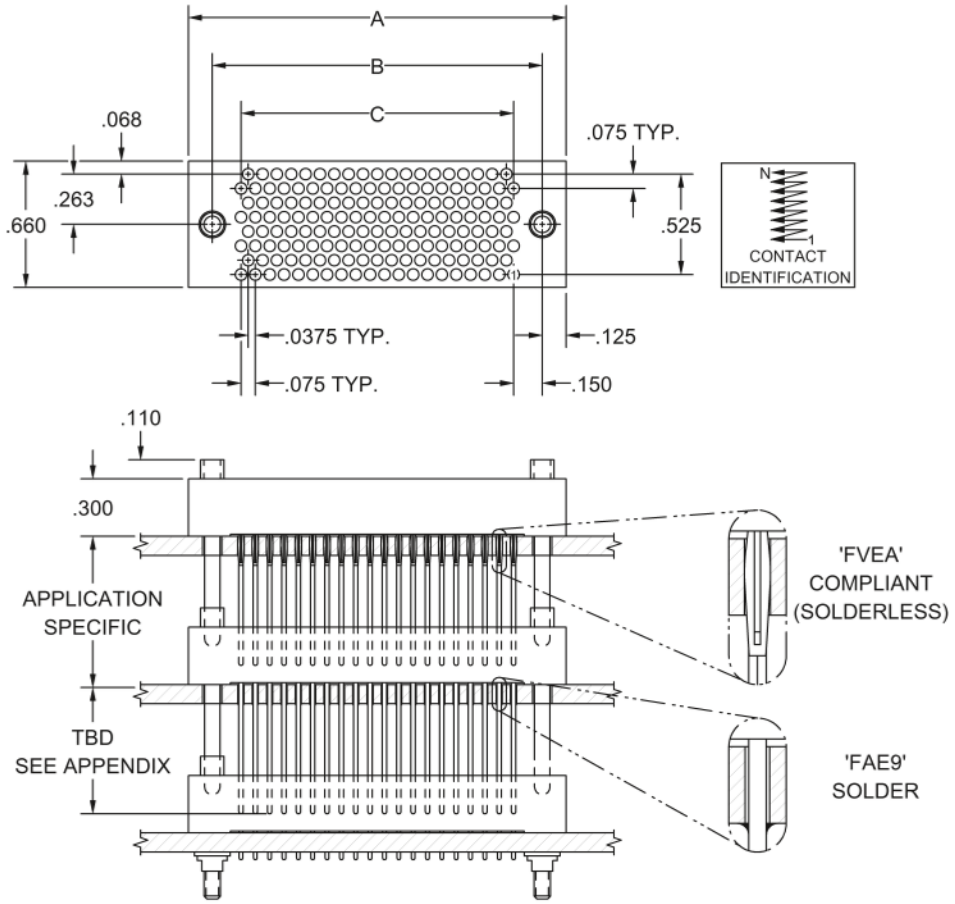

SIZE	A	B	C
156	1.975	1.725	1.425
164	2.050	1.800	1.500
172	2.125	1.875	1.575
180	2.200	1.950	1.650
188	2.275	2.025	1.725
196	2.350	2.100	1.800
204	2.425	2.175	1.875
212	2.500	2.250	1.950
220	2.575	2.325	2.025
228	2.650	2.400	2.100
236	2.725	2.475	2.175

SIZE	A	B	C
244	2.800	2.550	2.250
252	2.875	2.625	2.325
260	2.950	2.700	2.400
268	3.025	2.775	2.475
276	3.100	2.850	2.550
284	3.175	2.925	2.625
292	3.250	3.000	2.700
300	3.325	3.075	2.775
308	3.400	3.150	2.850
316	3.475	3.225	2.925

REFER TO APPENDIX FOR TERMINATION DETAILS, HARDWARE STYLES, POLARIZATION CHART, AND PWB PATTERNS

RECEPTACLE, STRAIGHT
STYLE FBE, FDE, FSE, FWE

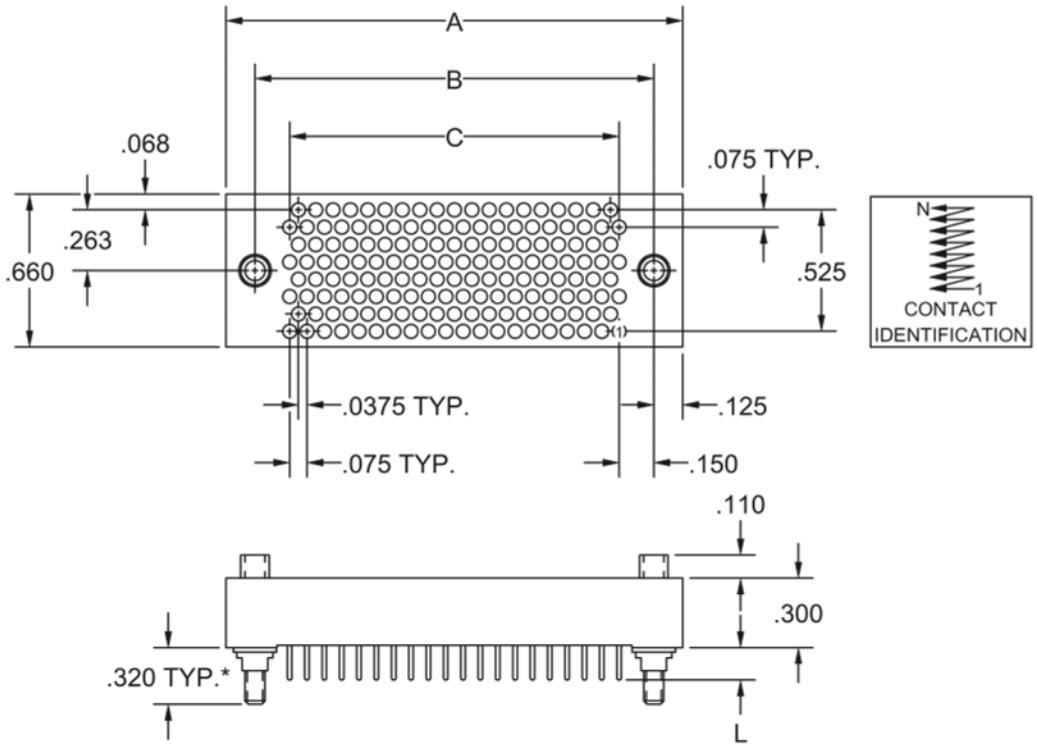

SIZE	A	B	C
156	1.975	1.725	1.425
164	2.050	1.800	1.500
172	2.125	1.875	1.575
180	2.200	1.950	1.650
188	2.275	2.025	1.725
196	2.350	2.100	1.800
204	2.425	2.175	1.875
212	2.500	2.250	1.950
220	2.575	2.325	2.025
228	2.650	2.400	2.100
236	2.725	2.475	2.175

SIZE	A	B	C
244	2.800	2.550	2.250
252	2.875	2.625	2.325
260	2.950	2.700	2.400
268	3.025	2.775	2.475
276	3.100	2.850	2.550
284	3.175	2.925	2.625
292	3.250	3.000	2.700
300	3.325	3.075	2.775
308	3.400	3.150	2.850
316	3.475	3.225	2.925

REFER TO APPENDIX FOR TERMINATION DETAILS, HARDWARE STYLES, POLARIZATION CHART, AND PWB PATTERNS

RECEPTACLE, COMPLIANT
STYLE FVE

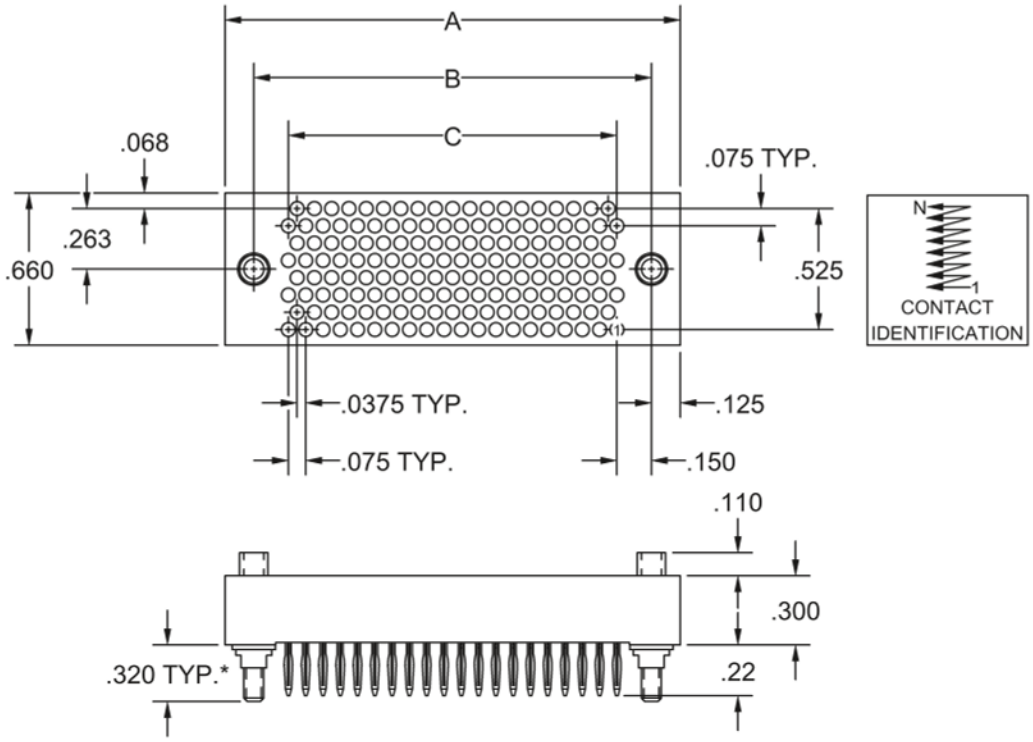

SIZE	A	B	C
156	1.975	1.725	1.425
164	2.050	1.800	1.500
172	2.125	1.875	1.575
180	2.200	1.950	1.650
188	2.275	2.025	1.725
196	2.350	2.100	1.800
204	2.425	2.175	1.875
212	2.500	2.250	1.950
220	2.575	2.325	2.025
228	2.650	2.400	2.100
236	2.725	2.475	2.175

SIZE	A	B	C
244	2.800	2.550	2.250
252	2.875	2.625	2.325
260	2.950	2.700	2.400
268	3.025	2.775	2.475
276	3.100	2.850	2.550
284	3.175	2.925	2.625
292	3.250	3.000	2.700
300	3.325	3.075	2.775
308	3.400	3.150	2.850
316	3.475	3.225	2.925

REFER TO APPENDIX FOR TERMINATION DETAILS, HARDWARE STYLES, POLARIZATION CHART, AND PWB PATTERNS

PLUG, STACKING
STYLE MAE9, MVEA

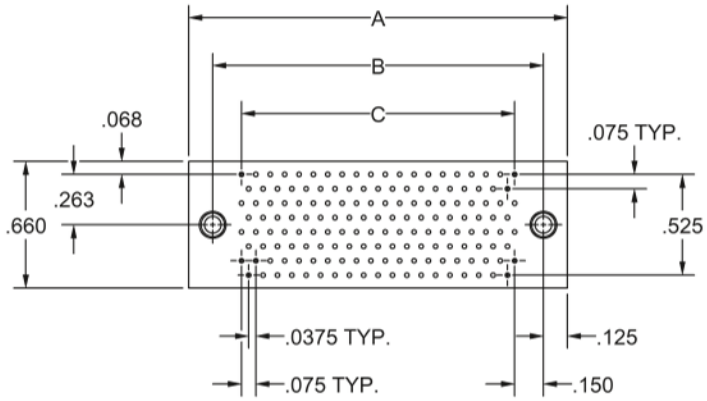

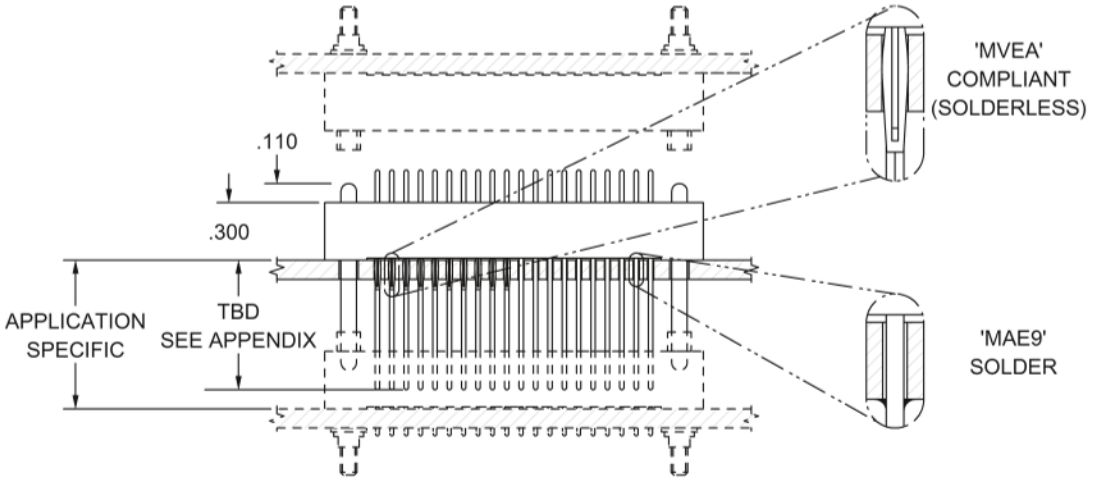

SIZE	A	B	C
156	1.975	1.725	1.425
164	2.050	1.800	1.500
172	2.125	1.875	1.575
180	2.200	1.950	1.650
188	2.275	2.025	1.725
196	2.350	2.100	1.800
204	2.425	2.175	1.875
212	2.500	2.250	1.950
220	2.575	2.325	2.025
228	2.650	2.400	2.100
236	2.725	2.475	2.175

SIZE	A	B	C
244	2.800	2.550	2.250
252	2.875	2.625	2.325
260	2.950	2.700	2.400
268	3.025	2.775	2.475
276	3.100	2.850	2.550
284	3.175	2.925	2.625
292	3.250	3.000	2.700
300	3.325	3.075	2.775
308	3.400	3.150	2.850
316	3.475	3.225	2.925

REFER TO APPENDIX FOR TERMINATION DETAILS, HARDWARE STYLES, POLARIZATION CHART, AND PWB PATTERNS

PLUG, STRAIGHT
STYLE MBE, MDE, MSE, MWE

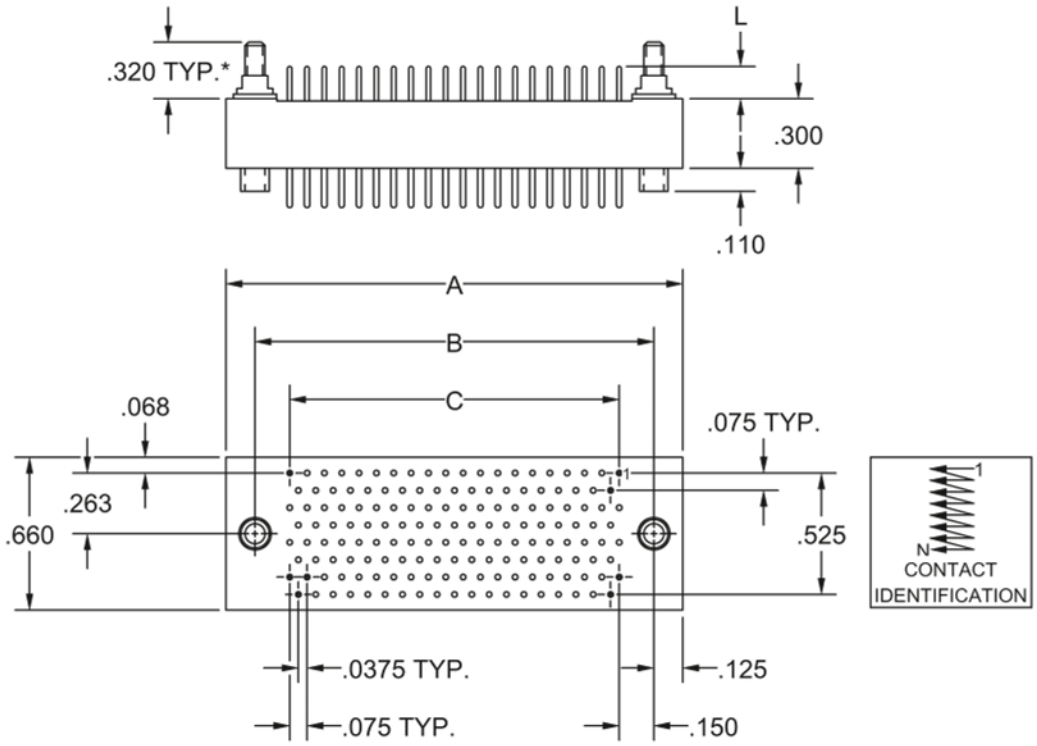

SIZE	A	B	C
156	1.975	1.725	1.425
164	2.050	1.800	1.500
172	2.125	1.875	1.575
180	2.200	1.950	1.650
188	2.275	2.025	1.725
196	2.350	2.100	1.800
204	2.425	2.175	1.875
212	2.500	2.250	1.950
220	2.575	2.325	2.025
228	2.650	2.400	2.100
236	2.725	2.475	2.175

SIZE	A	B	C
244	2.800	2.550	2.250
252	2.875	2.625	2.325
260	2.950	2.700	2.400
268	3.025	2.775	2.475
276	3.100	2.850	2.550
284	3.175	2.925	2.625
292	3.250	3.000	2.700
300	3.325	3.075	2.775
308	3.400	3.150	2.850
316	3.475	3.225	2.925

REFER TO APPENDIX FOR TERMINATION DETAILS, HARDWARE STYLES, POLARIZATION CHART, AND PWB PATTERNS

PLUG, COMPLIANT
STYLE MVE

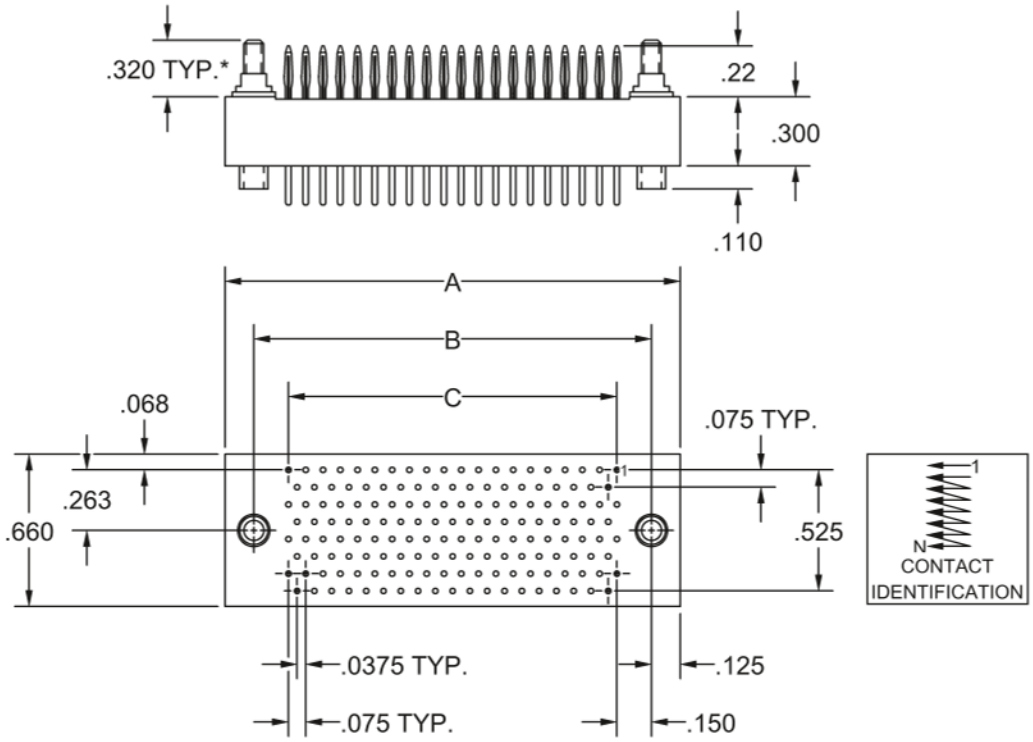

SIZE	A	B	C
156	1.975	1.725	1.425
164	2.050	1.800	1.500
172	2.125	1.875	1.575
180	2.200	1.950	1.650
188	2.275	2.025	1.725
196	2.350	2.100	1.800
204	2.425	2.175	1.875
212	2.500	2.250	1.950
220	2.575	2.325	2.025
228	2.650	2.400	2.100
236	2.725	2.475	2.175

SIZE	A	B	C
244	2.800	2.550	2.250
252	2.875	2.625	2.325
260	2.950	2.700	2.400
268	3.025	2.775	2.475
276	3.100	2.850	2.550
284	3.175	2.925	2.625
292	3.250	3.000	2.700
300	3.325	3.075	2.775
308	3.400	3.150	2.850
316	3.475	3.225	2.925

REFER TO APPENDIX FOR TERMINATION DETAILS, HARDWARE STYLES, POLARIZATION CHART, AND PWB PATTERNS

PLUG, RIGHT ANGLE
STYLE MEE

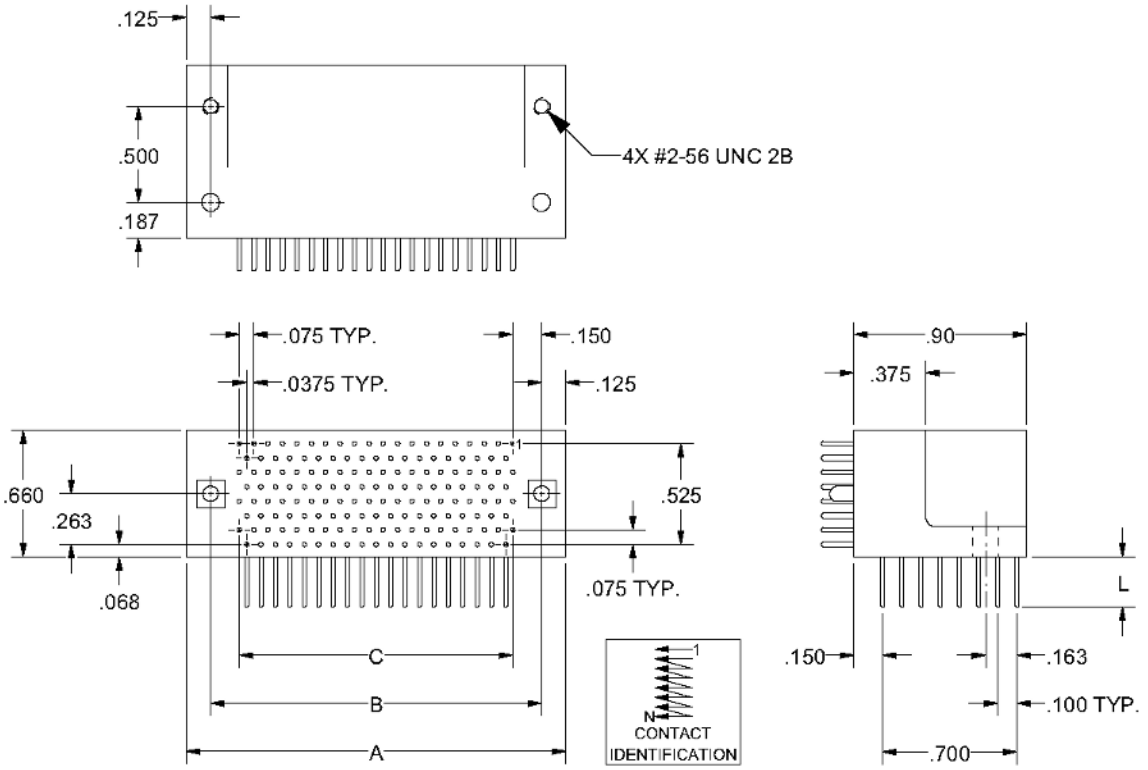

SIZE	A	B	C
156	1.975	1.725	1.425
164	2.050	1.800	1.500
172	2.125	1.875	1.575
180	2.200	1.950	1.650
188	2.275	2.025	1.725
196	2.350	2.100	1.800
204	2.425	2.175	1.875
212	2.500	2.250	1.950
220	2.575	2.325	2.025
228	2.650	2.400	2.100
236	2.725	2.475	2.175

SIZE	A	B	C
244	2.800	2.550	2.250
252	2.875	2.625	2.325
260	2.950	2.700	2.400
268	3.025	2.775	2.475
276	3.100	2.850	2.550
284	3.175	2.925	2.625
292	3.250	3.000	2.700
300	3.325	3.075	2.775
308	3.400	3.150	2.850
316	3.475	3.225	2.925

REFER TO APPENDIX FOR TERMINATION DETAILS, HARDWARE STYLES, POLARIZATION CHART, AND PWB PATTERNS

APPLICATION NOTES
STYLE 'MRE' CARD-EDGE SURFACE MOUNT
4 & 6 ROW

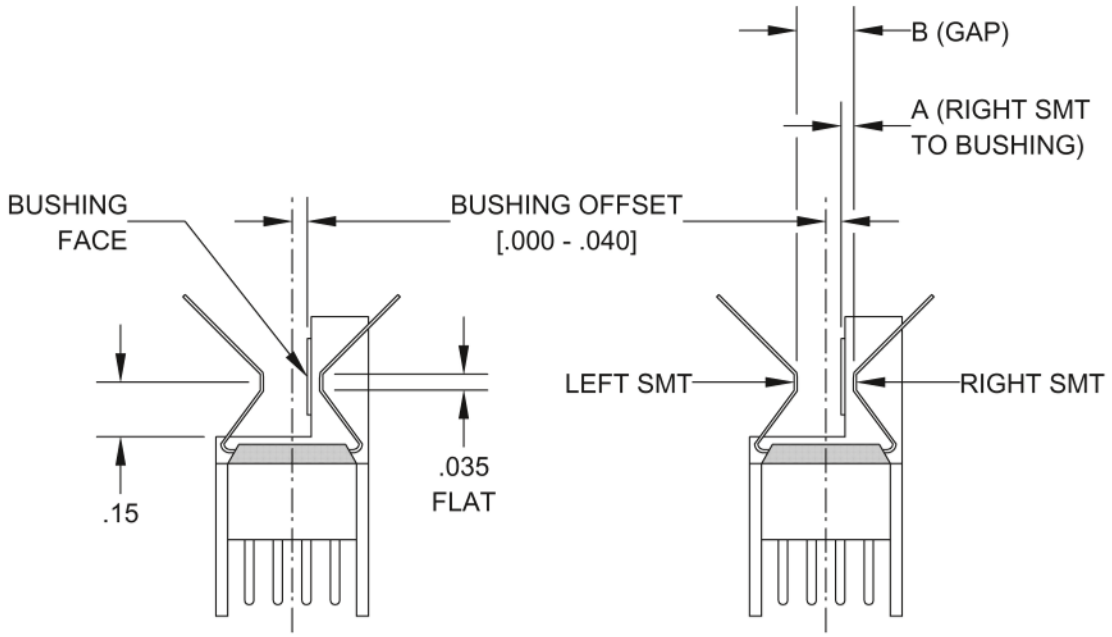

This style of termination is semi-custom. It is specific to the individual user's modules construction. A substantial number of previously developed forms exist, but are too numerous for inclusion here. Please contact the factory before assigning specific values to bushing offset and SMT 'A' and 'B' dimensions.

For communication purposes, the terminology used in the above views will be helpful.

For conditions where the right SMT is left of the bushing face, the 'A' dimension will be shown as a negative. This will often be the case where the module's construction has no core heat sink.

When a core heat sink is present, design intent is to have the bushing face against the core sink surface; further, it is intended that this same surface be the heat transfer surface for solid cores using card slot surface as a system sink.

For initial design purposes, it is necessary to determine the nominal thickness and tolerance for each element of the module. This enables gap values to be chosen so that "worst case" conditions will still result in the module pads being under compression prior to SMT soldering. Pad tension, or lifting moment, can lead to future pad failure, particularly under shock and/or vibration.

APPLICATION NOTES
STYLE 'MRE' CARD-EDGE SURFACE MOUNT
4 & 6 ROW

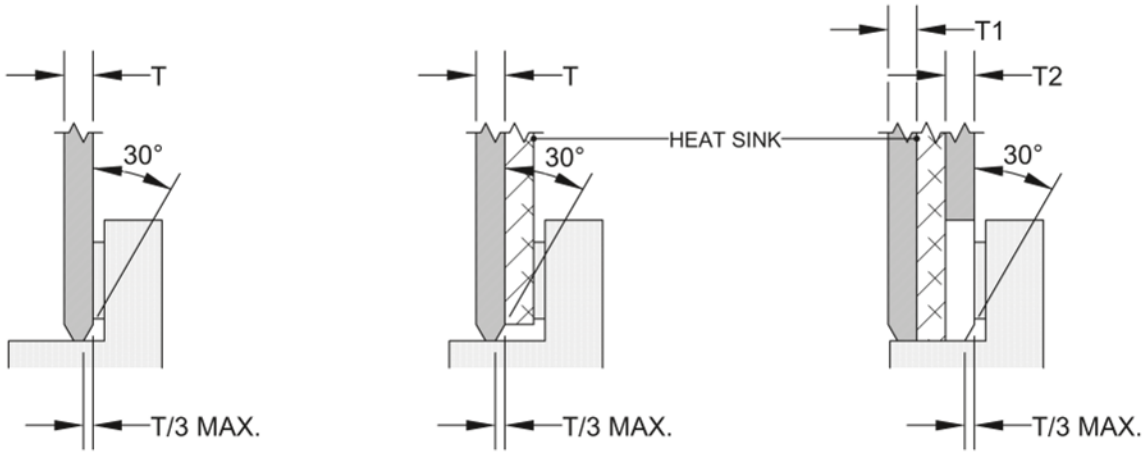

NO HEAT SINK SINGLE SIDED HEAT SINK CORE HEAT SINK

The above view shows recommended leading edge configuration for use with MRE style plugs. Chamfered leading edges substantially reduce operator force required to seat PWA/PWB'S.

The two right hand views show recommended mounting scheme for use with modules containing a heat sink. Use of this scheme will greatly reduce the cumulative tolerance issues in packaging. It is design intent that the surface of the heat sink in contact with the bushing be the surface which is used for heat transfer; in packaging employing wedge locks, this is the surface opposite the wedge lock mechanism.

TERMINATION STYLES
RECEPTACLE (.315" INSULATOR), 4 ROW
HARDWARE OMITTED FOR CLARITY

FAE9
STACKING

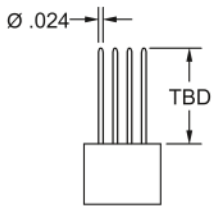

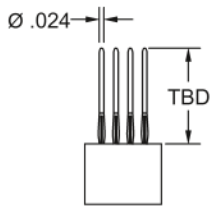

FVEA
COMPLIANT
STACKING

FBE
FLEX CABLE

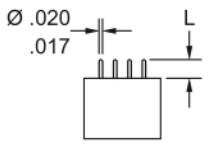

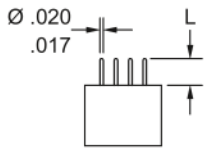

FDE
DIP SOLDER
STRAIGHT

FEE
DIP SOLDER
RIGHT ANGLE

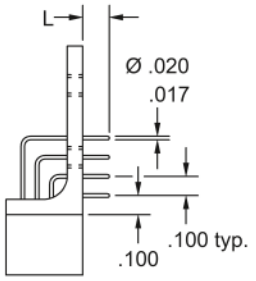

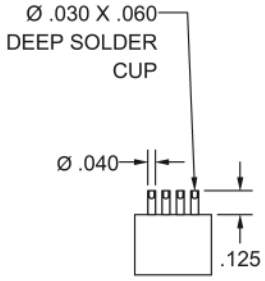

FSE
SOLDER CUP

FVE
COMPLIANT

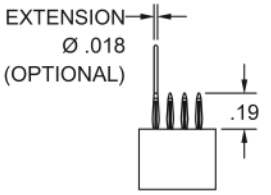

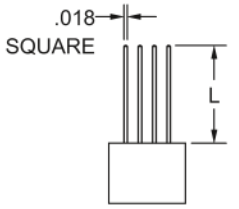

FWE
WIRE WRAP

TERMINATION STYLES
PLUG (.315" INSULATOR), 4 ROW
HARDWARE OMITTED FOR CLARITY
PIN SHIELDS OPTIONAL

MAE9
STACKING

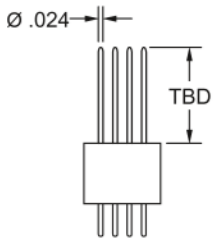

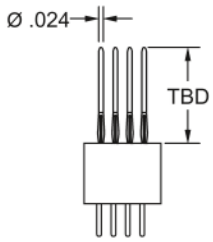

MVEA
COMPLIANT
STACKING

MBE
FLEX CABLE

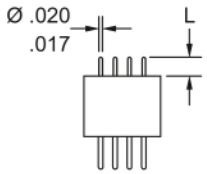

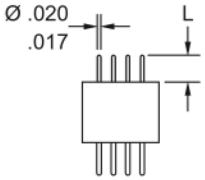

MDE
DIP SOLDER
STRAIGHT

MSE
SOLDER CUP

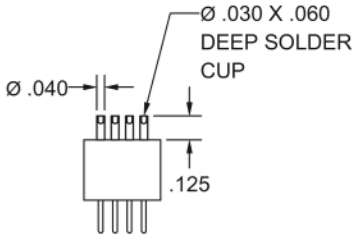

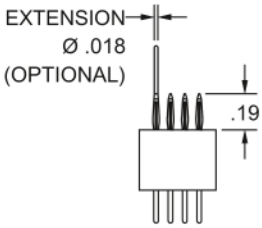

MVE
COMPLIANT

TERMINATION STYLES
PLUG, LOW PROFILE (.270" INSULATOR), 4 ROW
HARDWARE OMITTED FOR CLARITY

RBE
FLEX CABLE

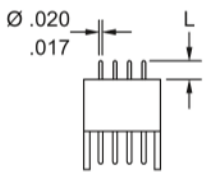

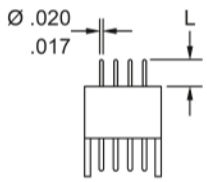

RDE
DIP SOLDER
STRAIGHT

MEE
DIP SOLDER
RIGHT ANGLE

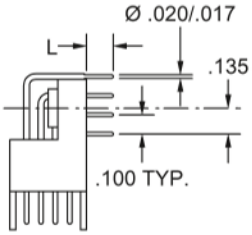

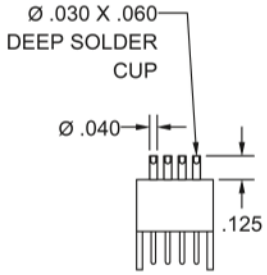

RSE
SOLDER CUP

MRE
SURFACE MOUNT

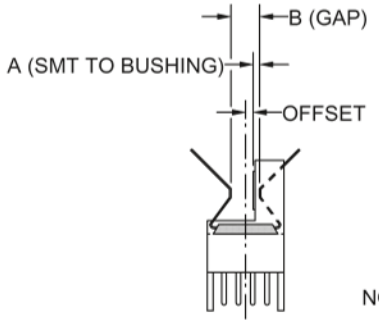

REFER TO APPLICATION
NOTES FOR MORE DETAILS

TERMINATION STYLES
RECEPTACLE (.315” INSULATOR), 6 ROW
HARDWARE OMITTED FOR CLARITY

FAE9
STACKING

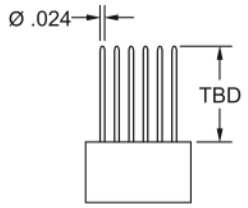

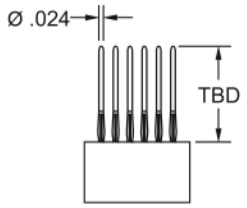

FVEA
COMPLIANT
STACKING

FBE
FLEX CABLE

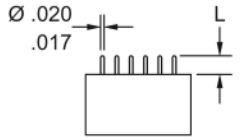

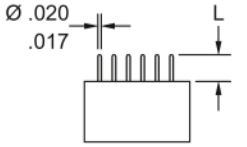

FDE
DIP SOLDER
STRAIGHT

FEE
DIP SOLDER
RIGHT ANGLE

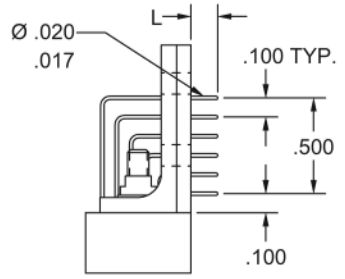

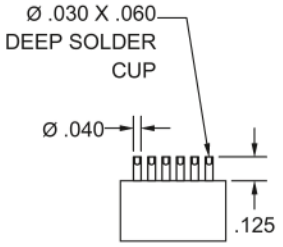

FSE
SOLDER CUP

FVE
COMPLIANT

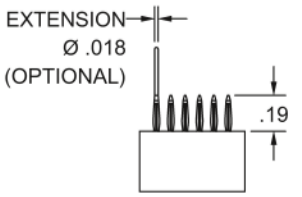

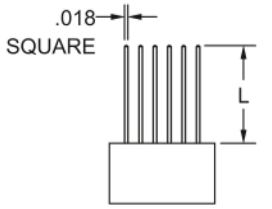

FWE
WIRE WRAP

TERMINATION STYLES
PLUG (.315" INSULATOR), 6 ROW
HARDWARE OMITTED FOR CLARITY
PIN SHIELDS OPTIONAL

MAE9
STACKING

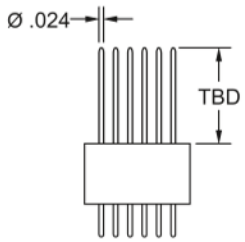

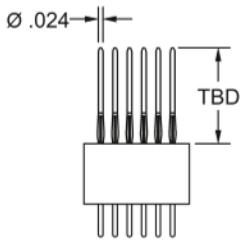

MVEA
COMPLIANT
STACKING

MBE
FLEX CABLE

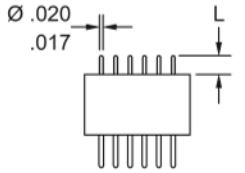

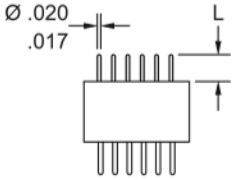

MDE
DIP SOLDER
STRAIGHT

MSE
SOLDER CUP

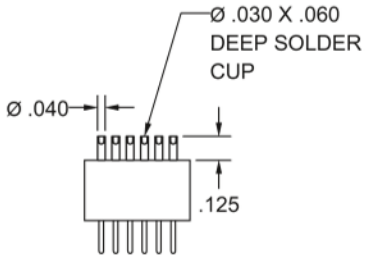

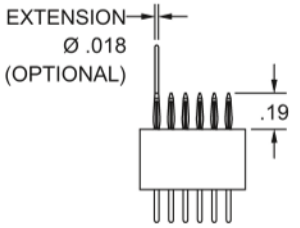

MVE
COMPLIANT

TERMINATION STYLES
PLUG, LOW PROFILE (.270" INSULATOR), 6 ROW
HARDWARE OMITTED FOR CLARITY

RBE
FLEX CABLE

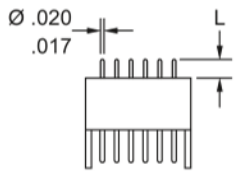

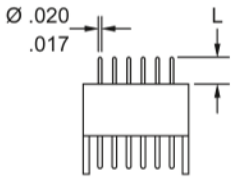

RDE
DIP SOLDER
STRAIGHT

MEE
DIP SOLDER
RIGHT ANGLE

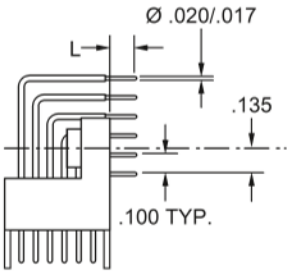

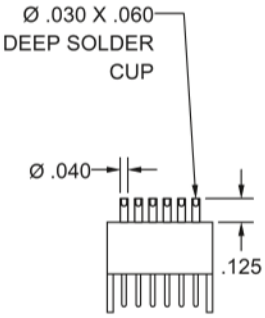

RSE
SOLDER CUP

MRE
SURFACE MOUNT

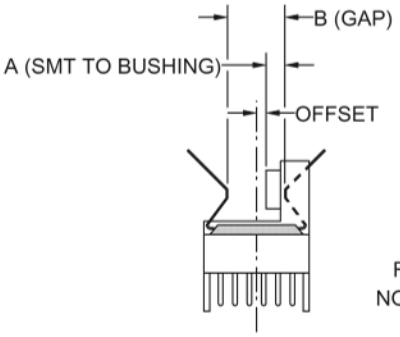

REFER TO APPLICATION
NOTES FOR MORE DETAILS

TERMINATION STYLES
RECEPTACLE (.300" INSULATOR), 8 ROW
HARDWARE OMITTED FOR CLARITY

FAE9
STACKING

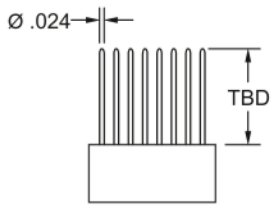

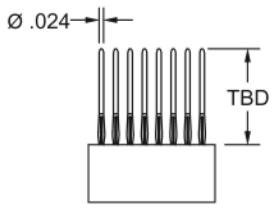

FVEA
COMPLIANT
STACKING

FBE
FLEX CABLE

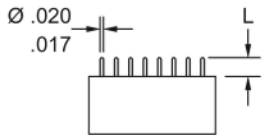

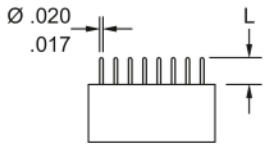

FDE
DIP SOLDER
STRAIGHT

FSE
SOLDER CUP

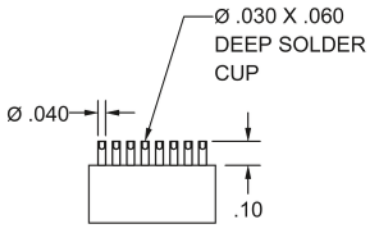

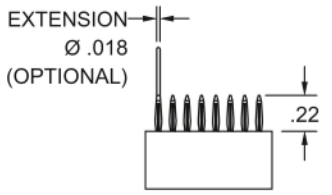

FVE
COMPLIANT

FWE
WIRE WRAP

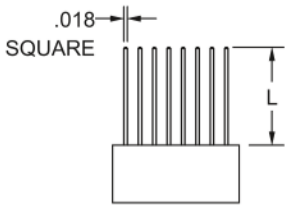

TERMINATION STYLES
PLUG (.300" INSULATOR EXCEPT 'MEE'), 8 ROW
HARDWARE OMITTED FOR CLARITY

MAE9
STACKING

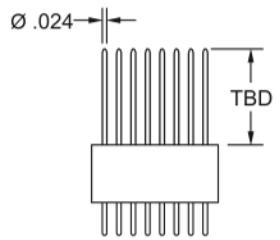

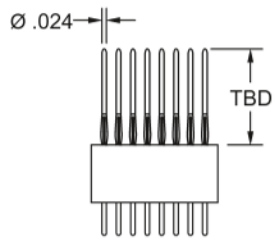

MVEA
COMPLIANT
STACKING

MBE
FLEX CABLE

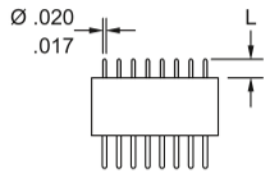

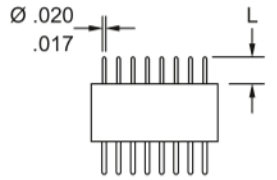

MDE
DIP SOLDER
STRAIGHT

MEE
DIP SOLDER
RIGHT ANGLE

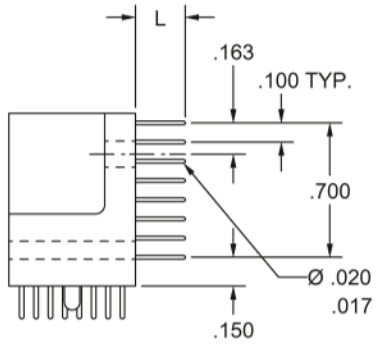

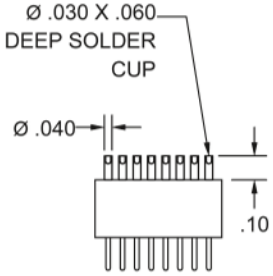

MSE
SOLDER CUP

MVE
COMPLIANT

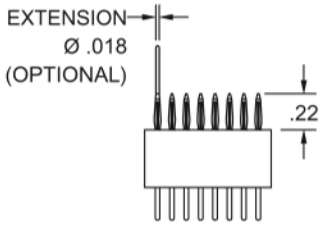

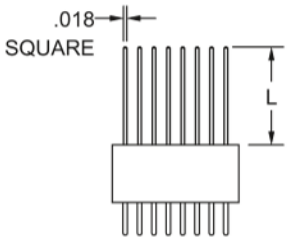

MWE
WIRE WRAP

HARDWARE STYLES
4 & 6 ROW

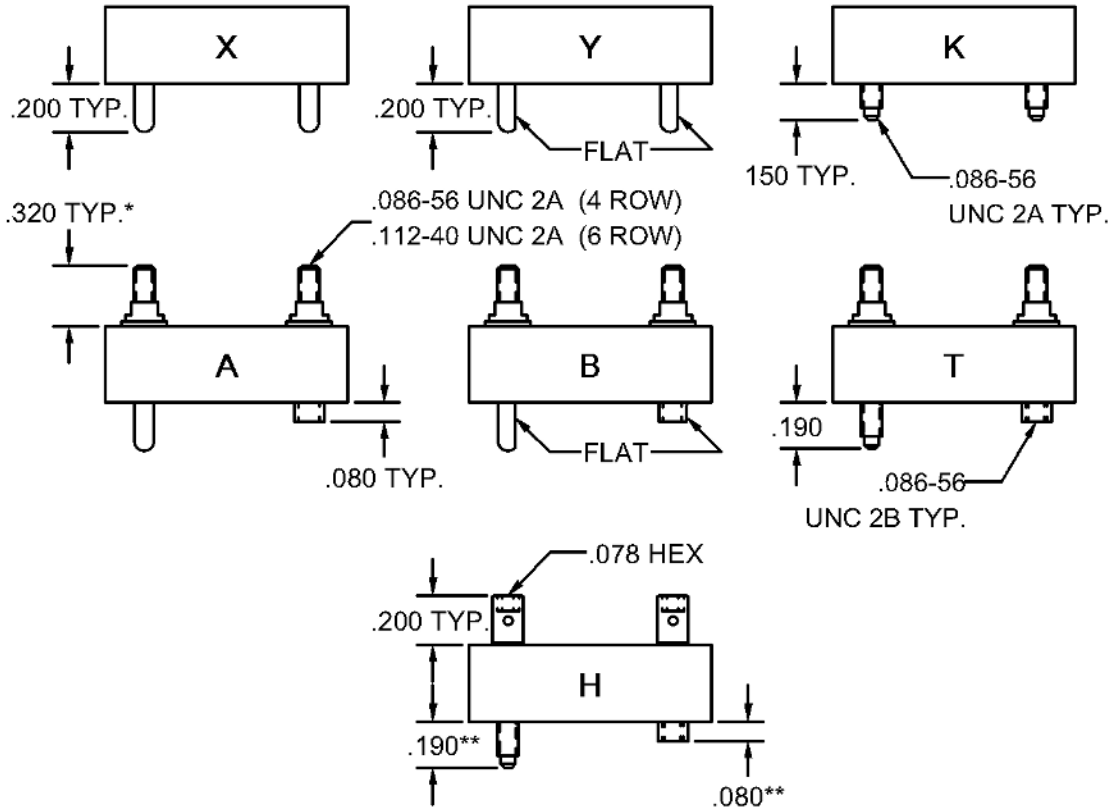

*.320 default stud length. Contact factory for alternate lengths and variation code assignment.
**.160 when used with .270 low profile insulator.

HARDWARE COMPATIBILITY							
	A	B	H	K	T	X	Y
A	•					•	
B		•					•
H				•	•		
K			•				
T			•				
X	•					•	
Y		•					•

HARDWARE-INSULATOR COMPATIBILITY														
	A		B		H		K		T		X		Y	
	PIN	SOCKET	PIN	SOCKET	SCREW	SOCKET	SCREW	SOCKET	SCREW	SOCKET	PIN	SOCKET	PIN	SOCKET
.315	•	•	•	•	•	•	•		•	•	•	•	•	•
.270 LOW PROF.	•	•	•	•	•	•	•		•		•	•	•	•
2PC .315		•		•						•				

HARDWARE STYLES
8 ROW

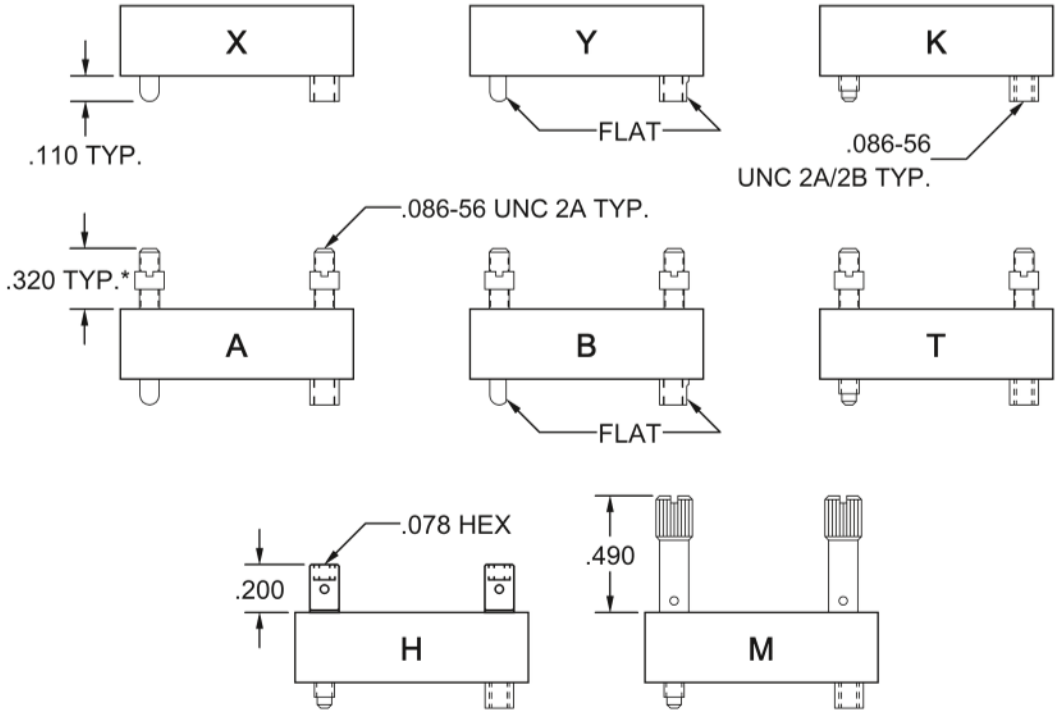

*.320 default stud length. Contact factory for alternate lengths and variation code assignment.
M55302/57-01 spanner wrench required for assembly of X,Y,K,A,B,T.
Only style X,Y,K,H available for 8 row MEE (dip solder right angle) connectors.

HARDWARE COMPATIBILITY								
	A	B	H	K	M	T	X	Y
A	●						●	
B		●						●
H				●		●		
K			●		●			
M				●		●		
T			●		●			
X	●						●	
Y		●						●

POLARIZATION CHART

4 & 6 ROW

AS VIEWED FROM THE MATING FACE

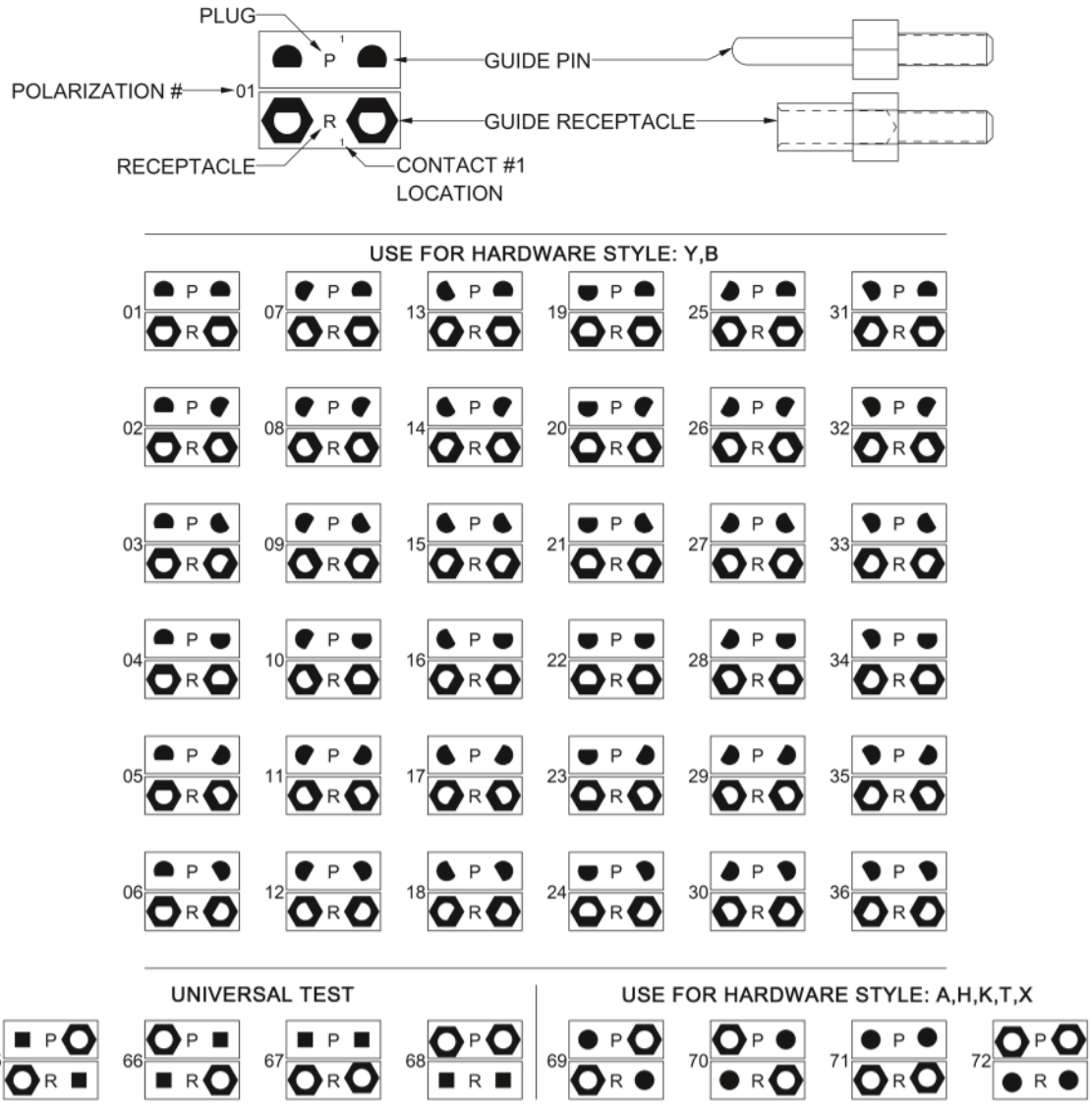

POLARIZATION CHART

8 ROW

AS VIEWED FROM THE MATING FACE

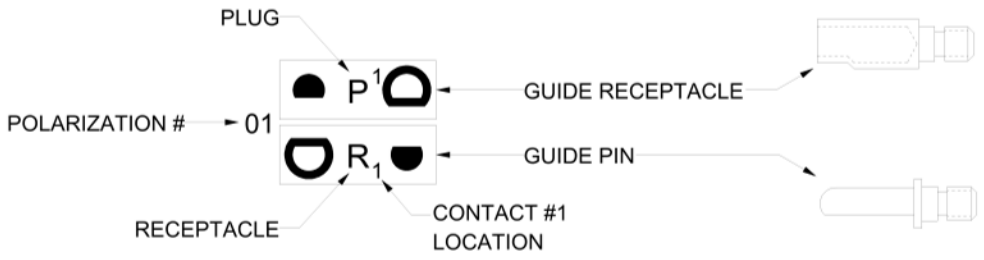

USE FOR HARDWARE STYLE: Y AND B

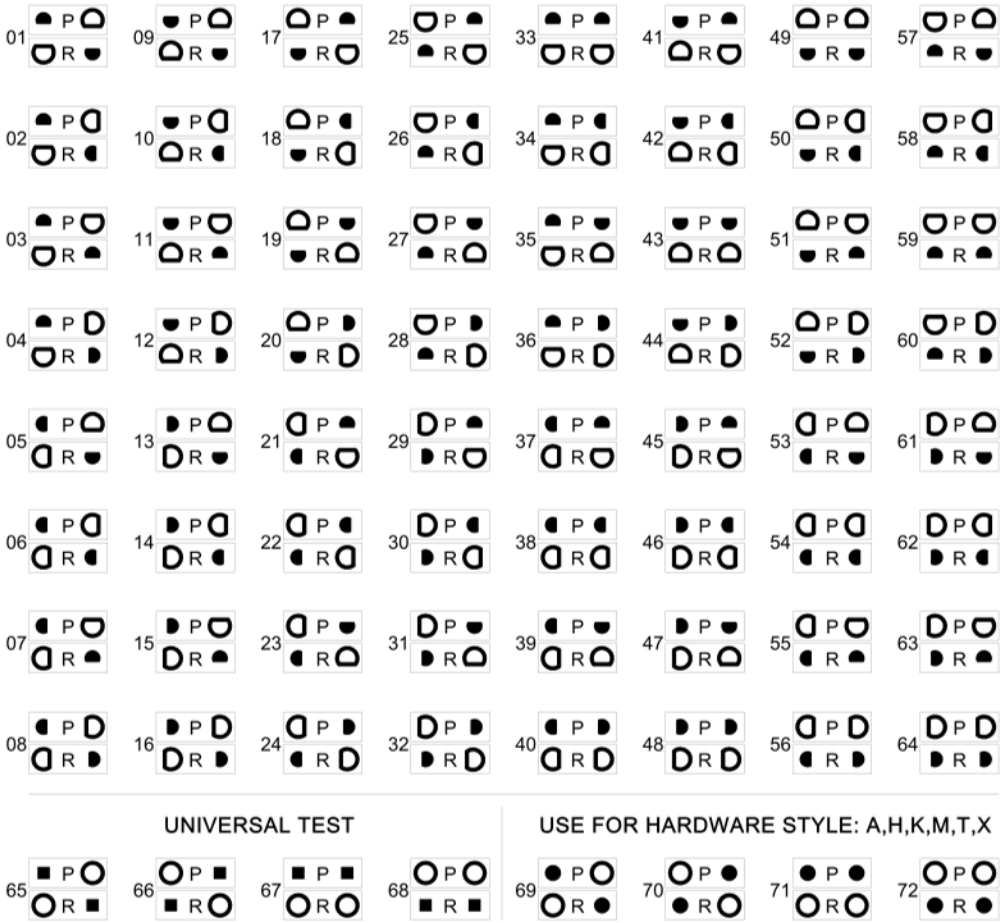

PWB PATTERN
4 ROW UNINTERRUPTED
AS VIEWED FROM THE CONNECTOR SIDE

F[A,B,D,V]E

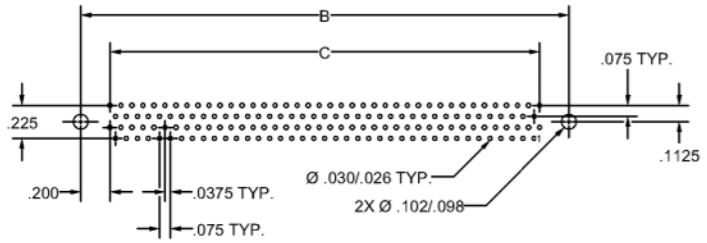

FEE

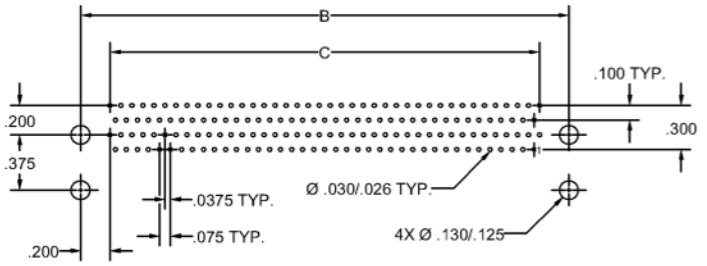

M[A,B,D,V]E
R[B,D]E

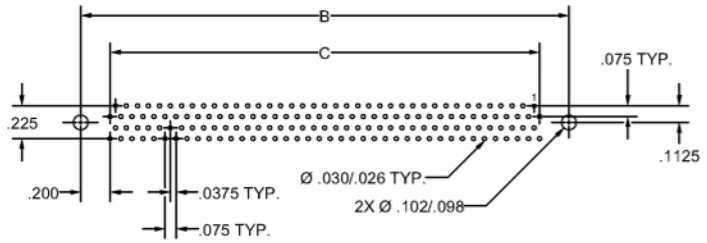

MEE

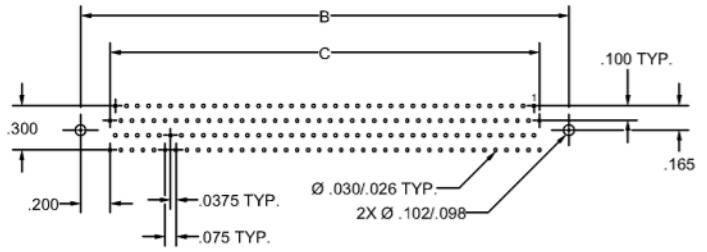

MRE

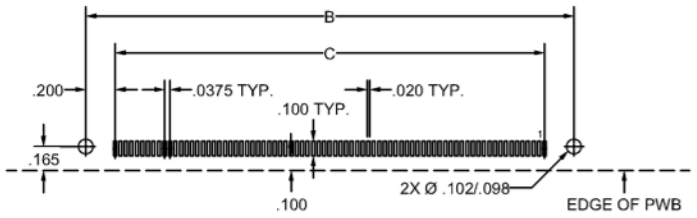

PWB PATTERN
4 ROW INTERRUPTED
AS VIEWED FROM THE CONNECTOR SIDE

F[A,B,D,V]E

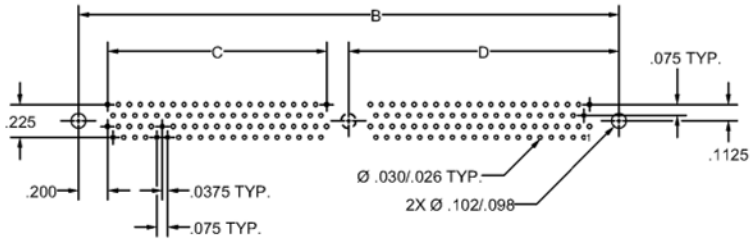

FEE

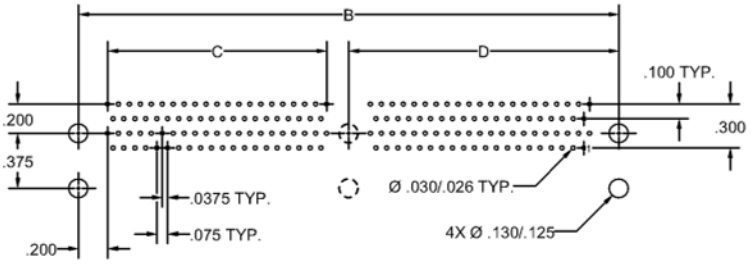

M[A,B,D,V]E
R[B,D]E

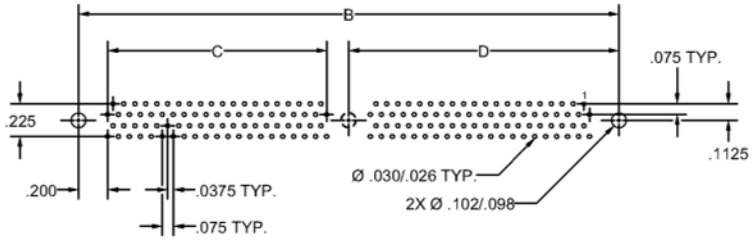

MEE

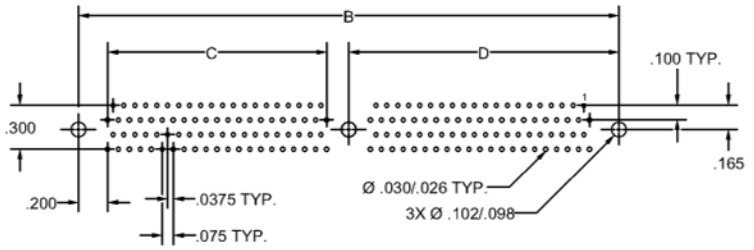

MRE

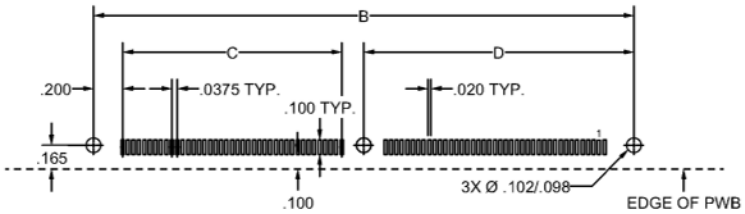

PWB PATTERN

6 ROW RECEPTACLE, INTERRUPTED

AS VIEWED FROM THE CONNECTOR SIDE

F[A,B,D,V]E

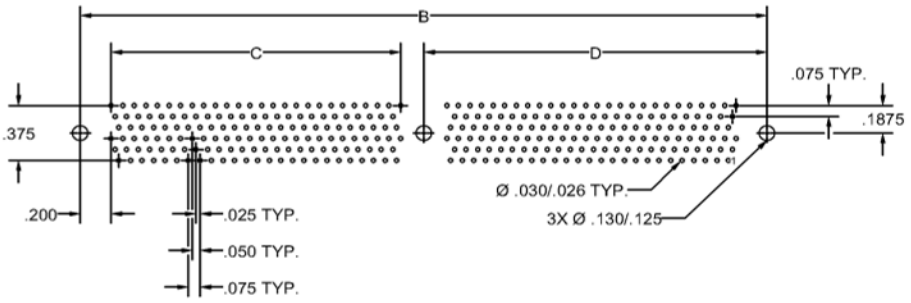

FEE

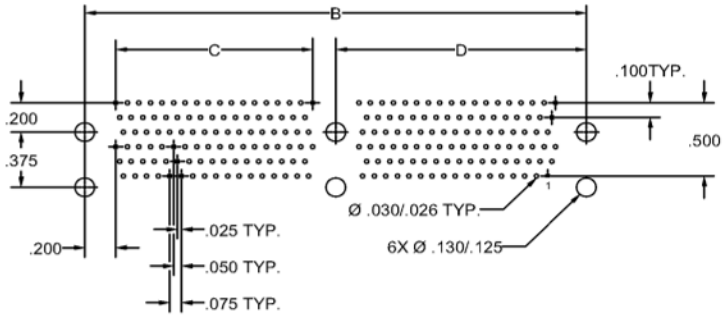

PWB PATTERN
6 ROW PLUG, INTERRUPTED
AS VIEWED FROM THE CONNECTOR SIDE

M[A,B,D,V]E
R[B,D]E

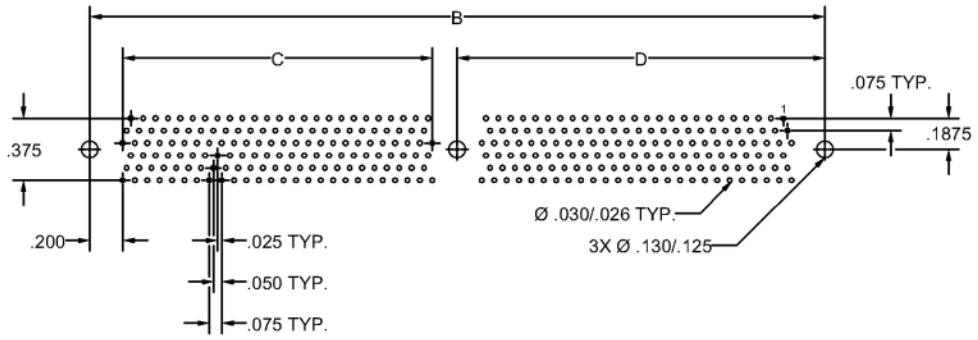

MEE

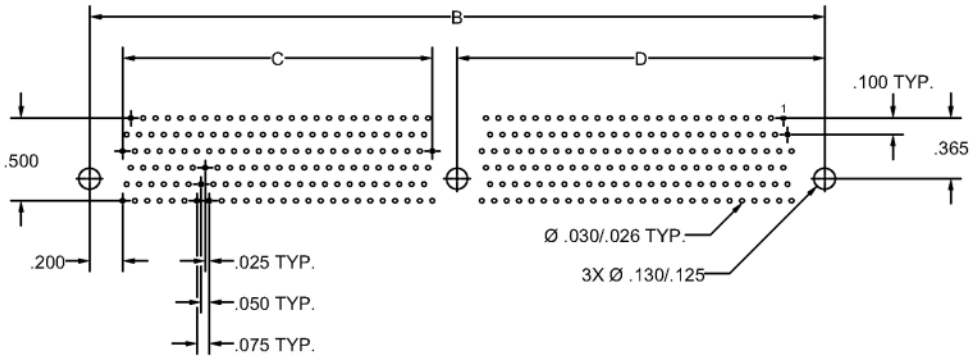

MRE

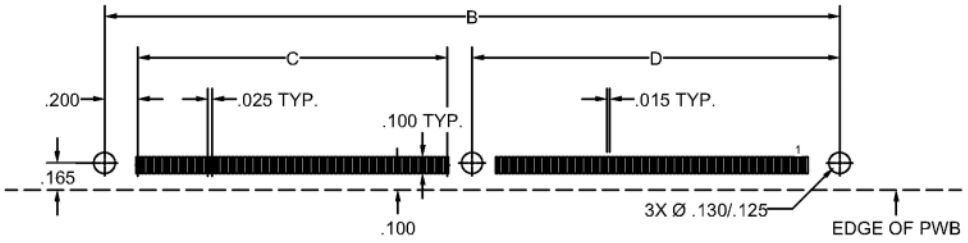

PWB PATTERN
8 ROW UNINTERRUPTED
AS VIEWED FROM THE CONNECTOR SIDE

F[A,B,D,V]E

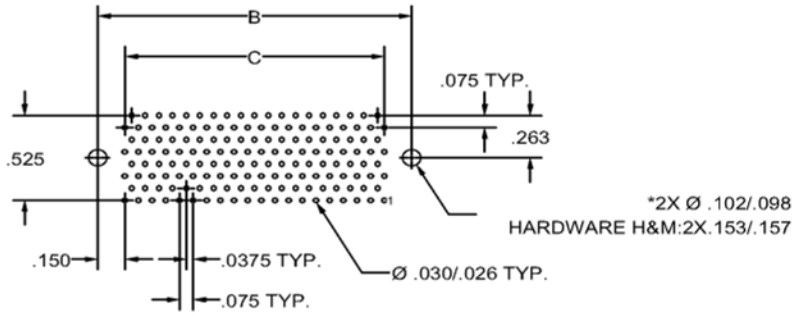

M[A,B,D,V]E

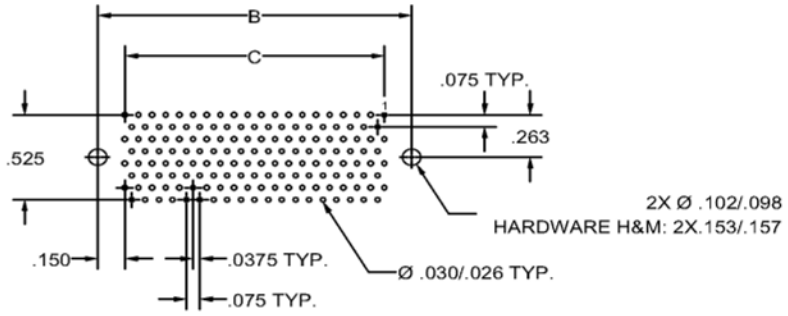

MEE

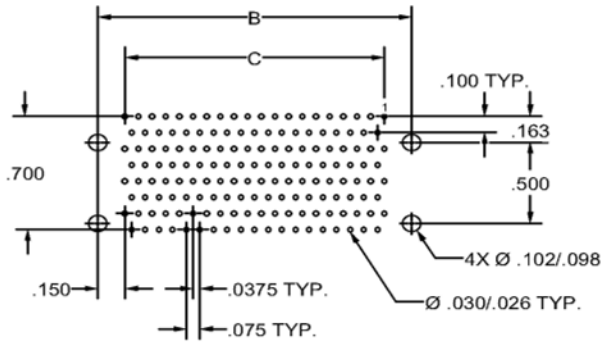

HMM117FEE...
RECEPTACLE, RIGHT ANGLE

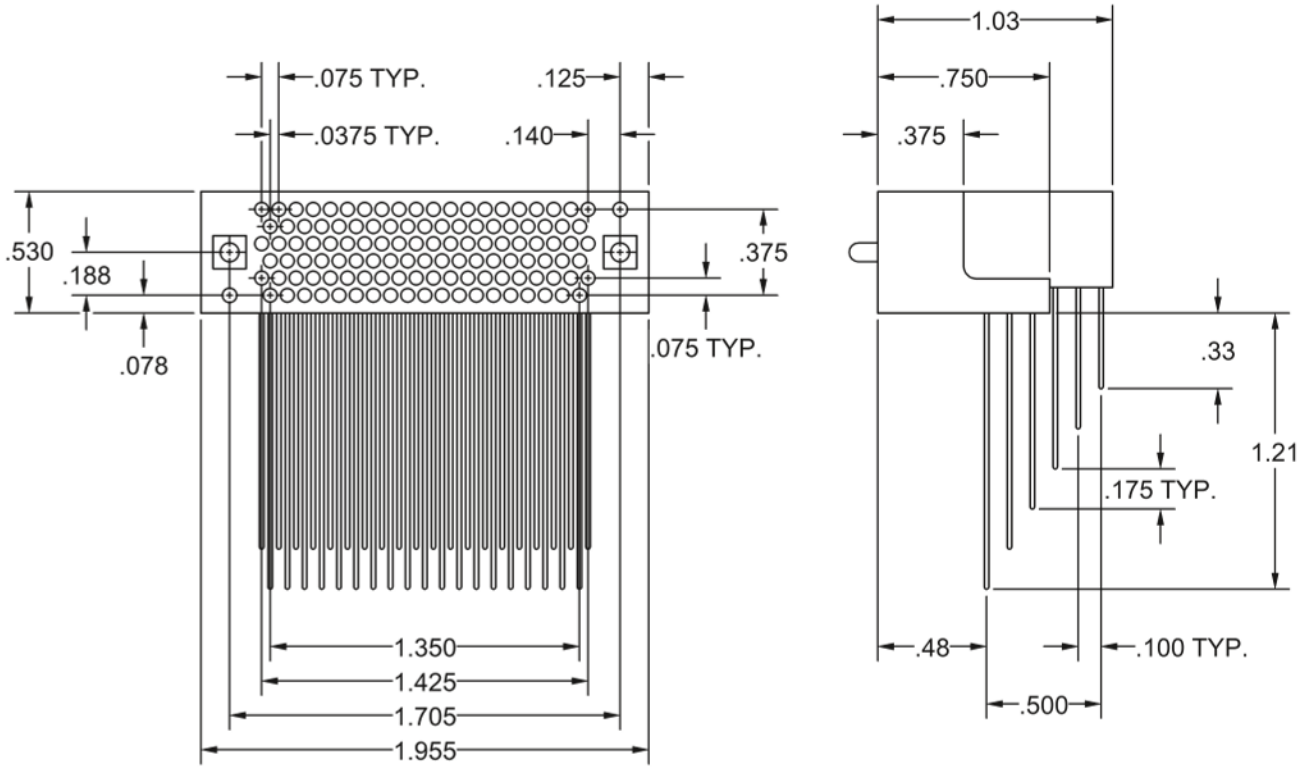

Note:
Rotating Jackscrews Available

HMM117MDE...
PLUG, STRAIGHT

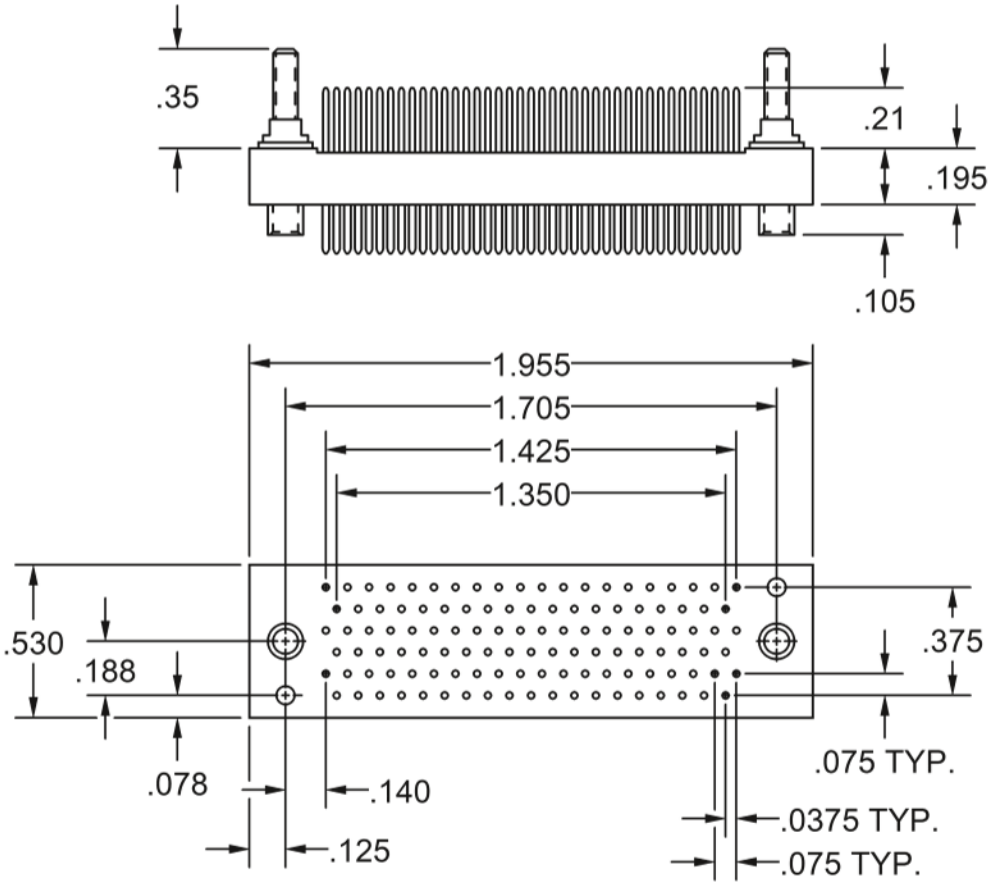

Note:
Rotating Jacksockets Available

HMM168 STYLE FDE, FSE
RECEPTACLE, STRAIGHT

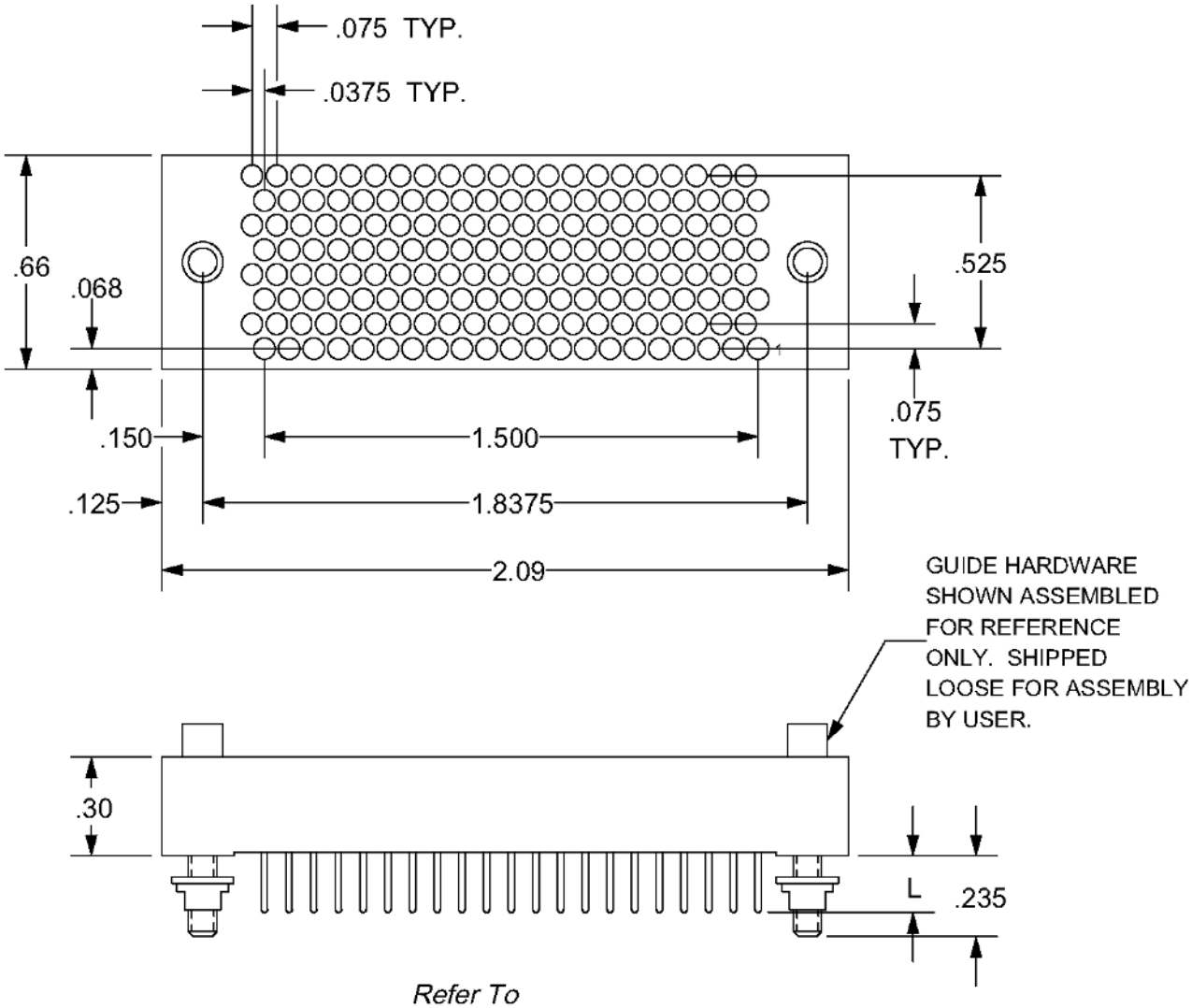

Refer To Appendix For Terminations Hardware Styles and Polarizing Arrangements

HMM168MEE
PLUG, RIGHT ANGLE

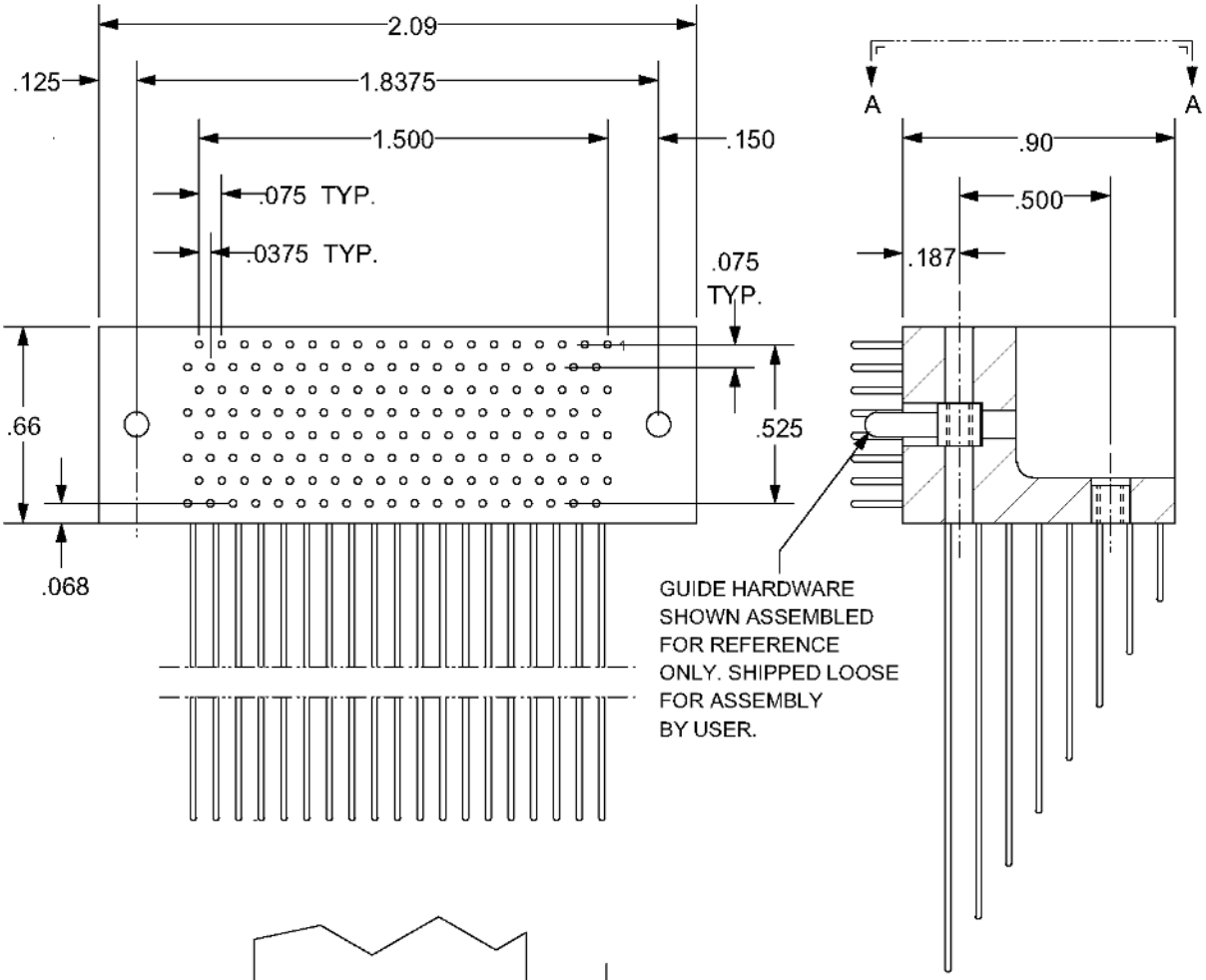

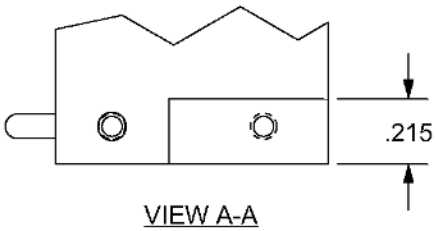

VIEW A-A

Refer To Appendix For Terminations Hardware Styles and Polarizing Arrangements

140 58th Street 8E, Brooklyn, NY 11220 Ph: (718) 492-4448 Fax: (718) 492-9898 www.iehcorp.com

HMM200FDE
RECEPTACLE, STRAIGHT

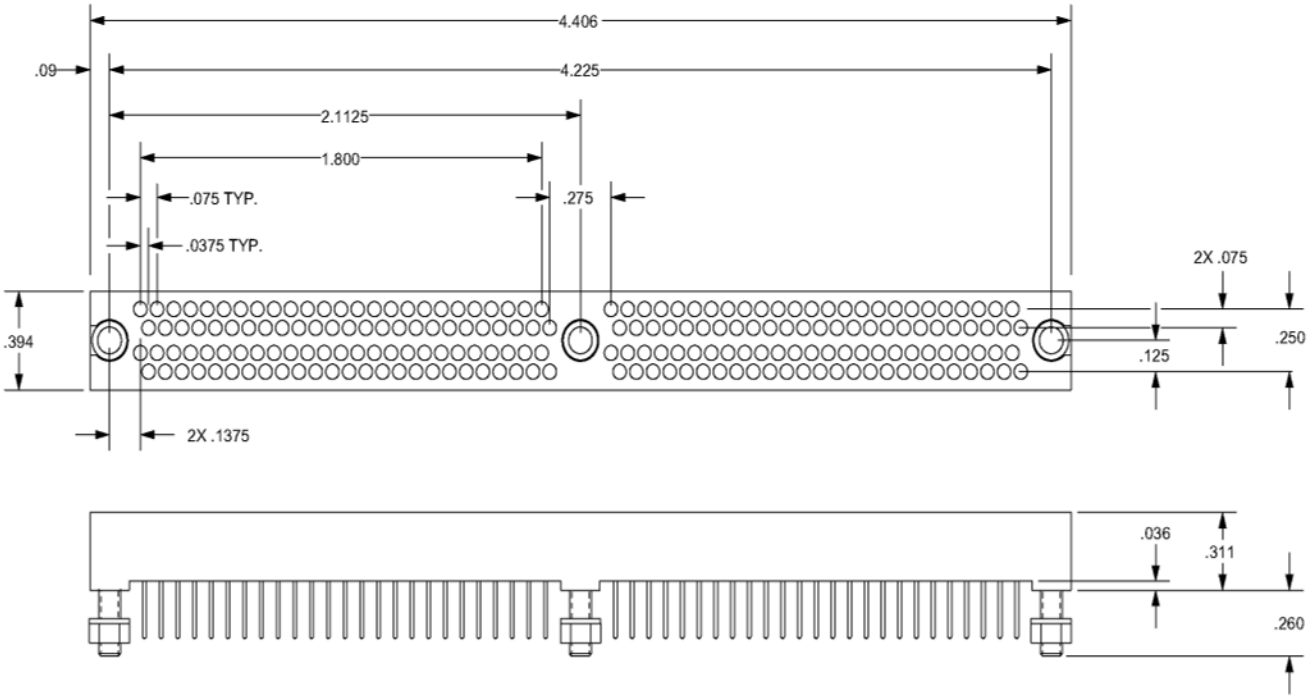

HMM200FEE...
RECEPTACLE, RIGHT ANGLE

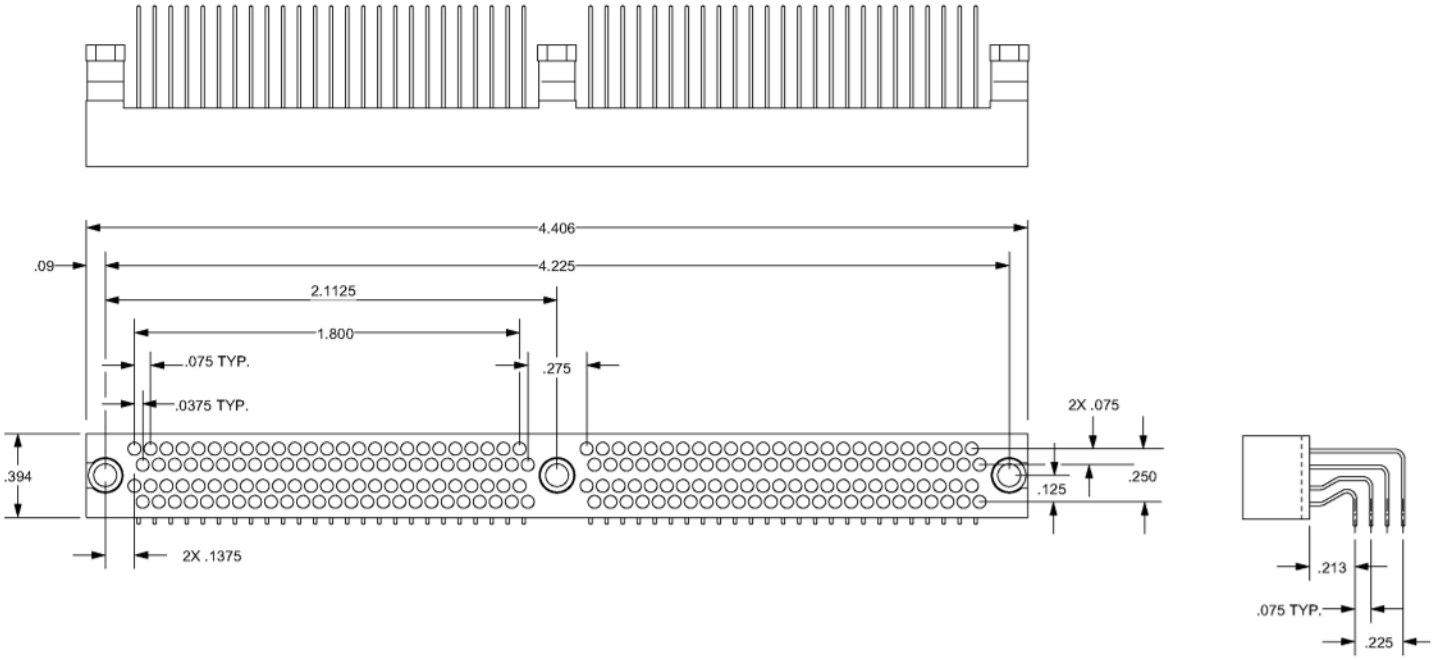

140 58th Street 8E, Brooklyn, NY 11220 Ph: (718) 492-4448 Fax: (718) 492-9898 www.iehcorp.com

HMM200MDE...
PLUG, STRAIGHT

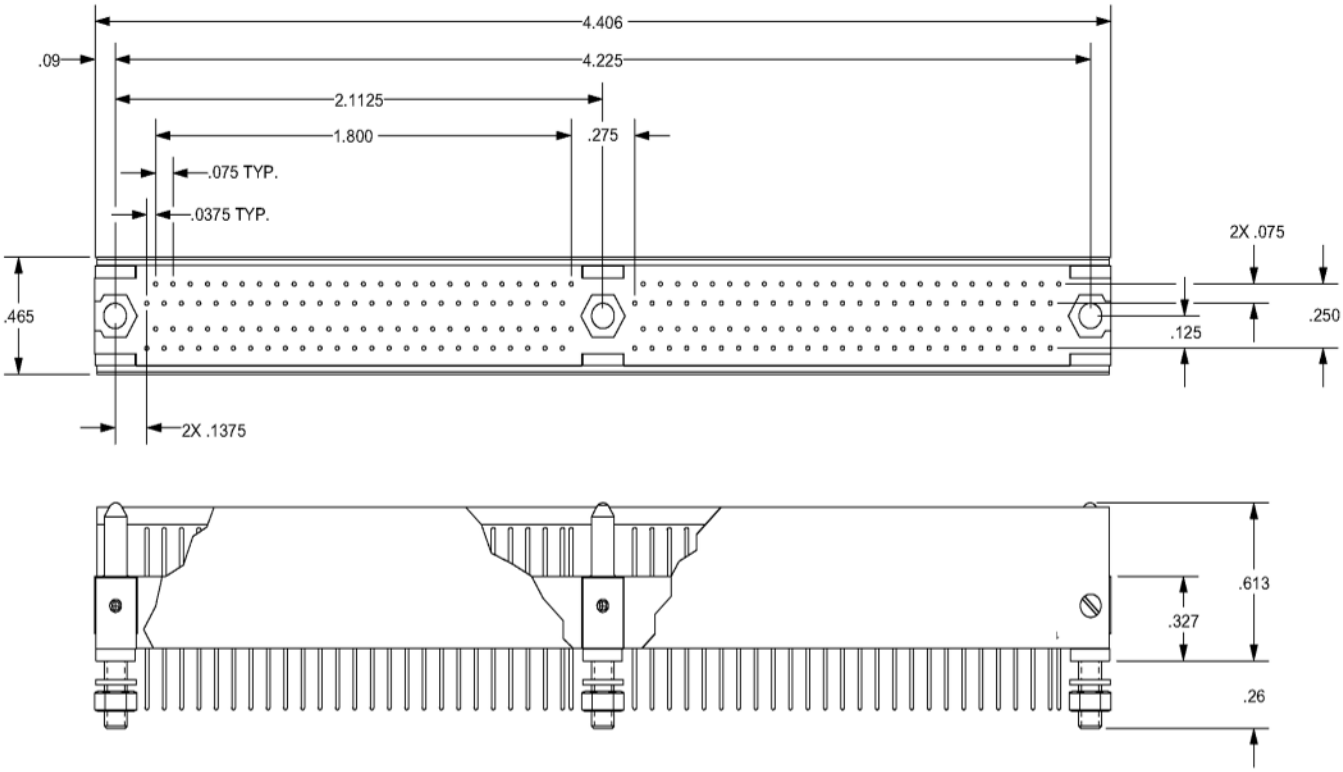

HMM200MRE...
PLUG, SURFACE MOUNT

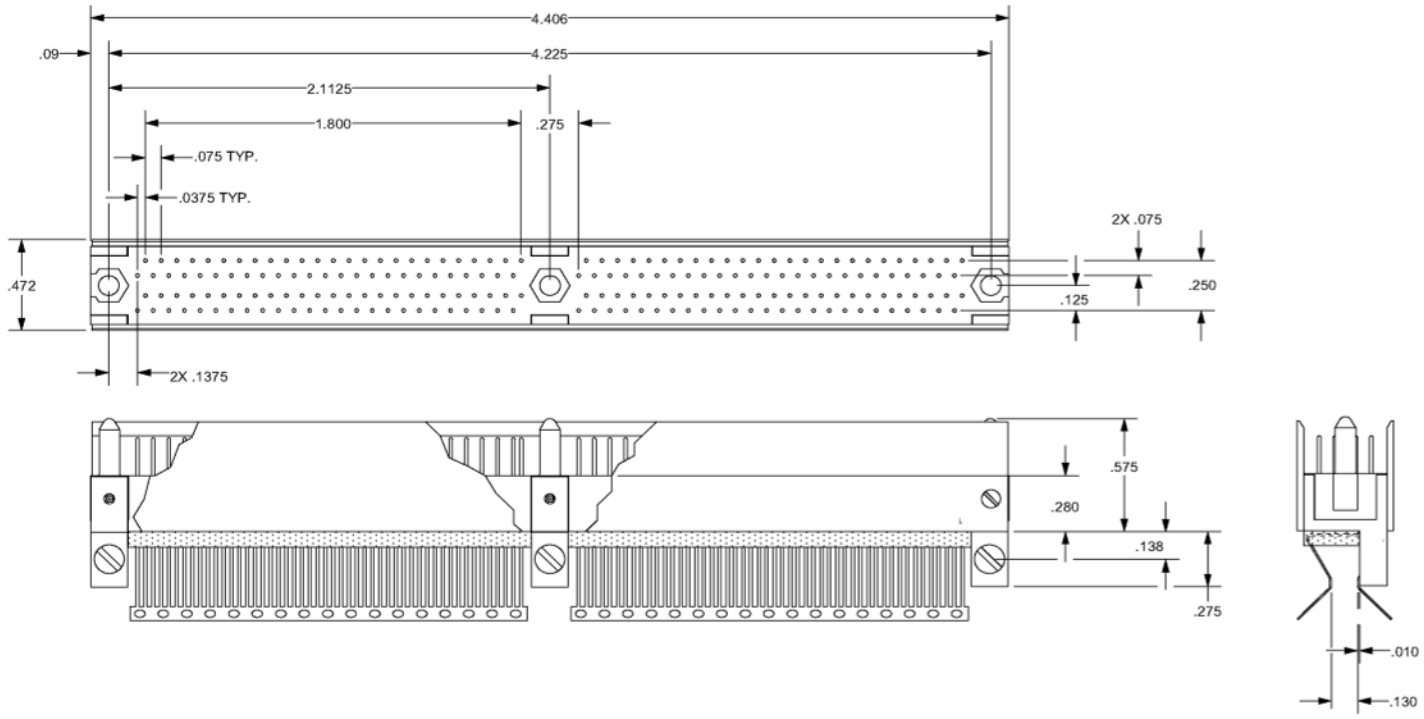

140 58th Street 8E, Brooklyn, NY 11220 Ph: (718) 492-4448 Fax: (718) 492-9898 www.iehcorp.com

IEH CORPORATION

140 58TH STREET, 8E, BROOKLYN, NY 11220

PHONE (718) 492-4448 • FAX (718) 492-9898

www.iehcorp.com • ieh@iehcorp.com