HGM .100” CENTERS .050” OFFSET SERIES

HYPERBOLOID CONNECTORS

FOR SUPERIOR PERFORMANCE IN ALL APPLICATIONS

IEH CORPORATION ISO 9001:2000

SMALL BUSINESS-HUB-ZONE CERTIFIED

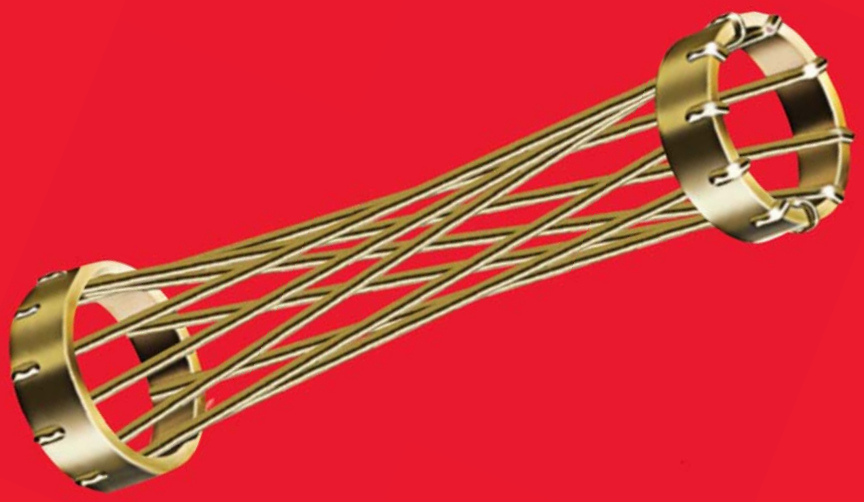

www.iehcorp.com

CONTENTS

HGM SERIES - .100 X .100 CONNECTORS

PAGE

4 Introduction
5 Specifications
6 Ordering Chart - 2 Row

2 ROW 010-070

7 FAE9, FVEA - Receptacle, Stacking
8 FBE, FDE, FSE, FWE - Receptacle, Straight (Flex Cable, Dip Solder, Solder Cup, Wire Wrap)
9 FEE - Receptacle, Right Angle (Dip Solder)
10 FRE - Receptacle, Surface Mount
11 FVE - Receptacle, Compliant
12 SAE9, SVEA - Receptacle, Plug Pattern, Stacking
13 SBE, SDE, SSE, SWE - Receptacle, Plug Pattern, Straight (Flex Cable, Dip Solder, Solder Cup, Wire Wrap)
14 SEE - Receptacle, Plug Pattern, Right Angle (Dip Solder)
15 SRE - Receptacle, Plug Pattern, Surface Mount
16 SVE - Receptacle, Plug Pattern, Compliant
17 MAE9, MVEA - Plug, Receptacle Pattern, Stacking
18 MBE, MDE, MSE, MWE - Plug, Receptacle Pattern, Straight (Flex Cable, Dip Solder, Solder Cup, Wire Wrap)
19 MEE, MXE - Plug, Right Angle (Dip Solder, Solder Cup)
20 MLE - Plug, Right Angle, Compliant
21 MRE - Plug, Receptacle Pattern, Surface Mount
22 MVE - Plug, Receptacle Pattern, Compliant
23 PAE9, PVEA - Plug, Stacking
24 PBE, PDE, PSE, PWE - Plug, Straight (Flex Cable, Dip Solder, Solder Cup, Wire Wrap)
25 PRE - Plug, Surface Mount
26 PVE - Plug, Compliant

2 ROW 090

27 FBE, FDE, FSE, FWE - Receptacle, Straight (Flex Cable, Dip Solder, Solder Cup, Wire Wrap)
28 FEE - Receptacle, Right Angle (Dip Solder)
29 FRE - Receptacle, Surface Mount
30 FVE - Receptacle, Compliant
31 MEE - Plug, Right Angle (Dip Solder)
32 RBE, RDE, RSE, RWE - Plug, Straight (Flex Cable, Dip Solder, Solder Cup, Wire Wrap)

2 ROW 100

33 HGM100 FBE, FDE, FSE, FWE - Receptacle, Straight (Flex Cable, Dip Solder, Solder Cup, Wire Wrap)
34 HGM100 FEE - Receptacle, Right Angle (Dip Solder)
35 HGM100 FRE - Receptacle, Surface Mount
36 HGM100 FVE - Receptacle, Compliant
37 HGM100 SBE, SDE, SSE, SWE - Receptacle, Plug Pattern, Straight (Flex Cable, Dip Solder, Solder Cup, Wire Wrap)
38 HGM100 SVE - Receptacle, Plug Pattern, Compliant
39 HGM100 MBE, MDE, MSE, MWE - Plug, Receptacle Pattern, Straight (Flex Cable, Dip Solder, Solder Cup, Wire Wrap)
40 HGM100 MEE - Plug, Right Angle (Dip Solder)
41 HGM100 PBE, PDE, PSE, PWE - Plug, Straight (Flex Cable, Dip Solder, Solder Cup, Wire Wrap)
42 HGM100 PVE - Plug, Compliant

CONTENTS
HGM SERIES - .100 X .100 CONNECTORS

PAGE

2 ROW 120

43 FBE, FDE, FSE, FWE - Receptacle, Straight (Flex Cable, Dip Solder, Solder Cup, Wire Wrap)
44 FEE - Receptacle, Right Angle (Dip Solder)
45 FRE - Receptacle, Surface Mount
46 FVE - Receptacle, Compliant
47 MEE - Plug, Right Angle (Dip Solder)
48 RBE, RDE, RSE, RWE - Plug, Straight (Flex Cable, Dip Solder, Solder Cup, Wire Wrap)

49 Ordering Chart - 3 Row

3 ROW 050-104

50 FAE9, FVEA - Receptacle, Stacking
51 FBE, FDE, FSE, FWE - Receptacle, Straight (Flex Cable, Dip Solder, Solder Cup, Wire Wrap)
52 FEE - Receptacle, Right Angle (Dip Solder)
53 FVE - Receptacle, Compliant
54 MAE9, MVEA - Plug, Stacking
55 MBE, MDE, MSE, MWE - Plug, Straight (Flex Cable, Dip Solder, Solder Cup, Wire Wrap)
56 MEE, MLE, MXE - Plug, Right Angle (Dip Solder, Compliant, Solder Cup)
57 MVE - Plug, Compliant

3 ROW 122

58 FAE9, FVEA - Receptacle, Stacking
59 FBE, FDE, FSE, FWE - Receptacle, Straight (Flex Cable, Dip Solder, Solder Cup, Wire Wrap)
60 FEE - Receptacle, Right Angle (Dip Solder)
61 FVE - Receptacle, Compliant
62 MAE9, MVEA - Plug, Stacking
63 MBE, MDE, MSE, MWE - Plug, Straight (Flex Cable, Dip Solder, Solder Cup, Wire Wrap)
64 MEE, MLE, MXE - Plug, Right Angle (Dip Solder, Compliant, Solder Cup)
65 MVE - Plug, Compliant

3 ROW 160

66 FAE9, FVEA - Receptacle, Stacking
67 FBE, FDE, FSE, FWE - Receptacle, Straight (Flex Cable, Dip Solder, Solder Cup, Wire Wrap)
68 FEE - Receptacle, Right Angle (Dip Solder)
69 FVE - Receptacle, Compliant
70 MAE9, MVEA - Plug, Stacking
71 MBE, MDE, MSE, MWE - Plug, Straight (Flex Cable, Dip Solder, Solder Cup, Wire Wrap)
72 MEE, MLE, MXE - Plug, Right Angle (Dip Solder, Compliant, Solder Cup)
73 MVE - Plug, Compliant

CONTENTS
HGM SERIES - .100 X .100 CONNECTORS

PAGE

3 ROW 208

74 FAE9, FVEA - Receptacle, Stacking
75 FBE, FDE, FSE, FWE - Receptacle, Straight (Flex Cable, Dip Solder, Solder Cup, Wire Wrap)
76 FEE - Receptacle, Right Angle (Dip Solder)
77 FVE - Receptacle, Compliant
78 MAE9, MVEA - Plug, Stacking
79 MBE, MDE, MSE, MWE - Plug, Straight (Flex Cable, Dip Solder, Solder Cup, Wire Wrap)
80 MEE, MLE, MXE - Plug, Right Angle (Dip Solder, Compliant, Solder Cup)
81 MVE - Plug, Compliant

SPECIALTY - 4 ROW

82 HGM 122 FBE, FDE, FSE, FWE
83 HGM 122 FEE
84 HGM 122 MBE, MDE, MSE, MWE
85 HGM 122 MEE

APPENDIX

A1 Termination Styles - 2 Row - Receptacle
A2 Termination Styles - 2 Row - Plug, Right Angle
A3 Termination Styles - 2 Row - Plug, Straight
A4 Termination Styles - 2 Row - Plug, Straight, High Profile
A5 Termination Styles - 3 Row - Receptacle
A6 Termination Styles - 3 Row - Plug, Right Angle
A7 Termination Styles - 3 Row - Plug, Straight
A8 Hardware Styles - 2 & 3 Row
A9 Polarization Chart - 2 & 3 Row
A10 PWB Pattern - 2 Row - 010-070, Receptacle Pattern
A11 PWB Pattern - 2 Row - 010-070, Plug Pattern
A12 PWB Pattern - 2 Row - 090, Receptacle Pattern
A13 PWB Pattern - 2 Row - 090, Plug Pattern
A14 PWB Pattern - 2 Row - 100, Receptacle Pattern
A15 PWB Pattern - 2 Row - 100, Plug Pattern
A16 PWB Pattern - 2 Row - 120, Receptacle Pattern
A17 PWB Pattern - 2 Row - 120, Plug Pattern
A18 PWB Pattern - 3 Row - 050-104
A19 PWB Pattern - 3 Row - 122
A20 PWB Pattern - 3 Row - 160
A21 PWB Pattern - 3 Row - 208

The HYPERBOLOID contact is an advanced design that satisfies performance requirements previously considered impossible. Radically different in concept, it is used in connectors having the highest standards of performance. The distinguishing feature of the HYPERBOLOID socket is the hyper-boloid-shaped sleeve formed by straight wires strung at an angle to the longitudinal axis. Viewed from the side, you see a curve defined by a series of apparent short straight line segments which are tangent lines to points along a hyperbolic curve. This geometry provides for a design which has a decreasing circumscribed circle when viewed from the entry. It begins larger than the pin acceptance diameter and is less than this same diameter at the center. When the pin is inserted into this sleeve, the wires stretch, well within elastic limits, to accommodate it. In so doing, the wires wrap themselves around the pin providing a number of continuous line contact paths. The illustration below will assist in visualization.

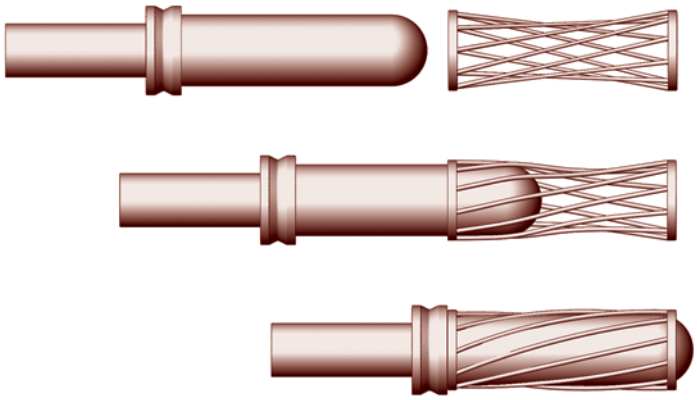

The actual physical construction of the contact involves several components. The wires are strung on an internal wire carrier (inner sleeve) which is subsequently capped or enclosed by a front outer ring (front sleeve) and rear ring which includes the termination configuration (terminal). All components to the assembly are completely finished with the specified electroplating prior to assembly. The wires are continuous process plated on reel before use. In this manner, interface finish requirements can be controlled very closely without the common problems of gradient, shadow, or other finish imperfections often appearing in alternative designs. Very often, this processing feature permits the specifier to reduce precious metal content with resultant savings. Joints are calculated interference fits, insuring gas tight interfaces between all elements of the HYPERBOLOID construction. An exploded view is provided next.

The unique geometry, precision processing, and careful attention to quality result in a highly desirable contact design which provides:

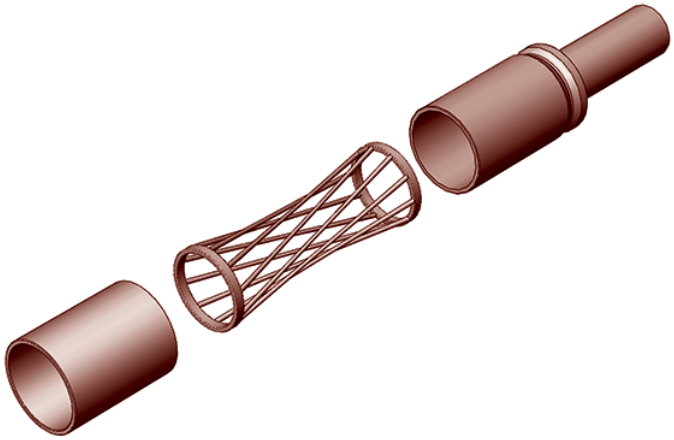

- **VLIF (Very Low Insertion Force):** Common sizes #22 and less average under one ounce per contact.
- **Extraordinary Resistance to Shock & Vibration:** Tests exceeding 300 g's without discontinuity.
- **Duty Cycle Exceeding 100,000 Mate/Demate:** The burnishing action of the wires on the pin surface is non-destructive. Unlike the "plow" and scrape action of common designs, HYPERBOLOID's gentle mating action enhances life.
- **Low, Low Contact Resistance:** The multiplicity of line contact, as opposed to point contact in other designs, provides an excellent interface exhibiting low contact resistance (often less than 1/2 of MIL spec. allowances). This characteristic also provides for a cooler running contact under load.
- **Improved Current Carrying Capacity:** The low contact resistance gives a lower °C rise from ambient under load. This feature often allows the user to operate the same size contact under higher load.
- **Highest Reliability:** In use for over 40 years under the most demanding conditions HYPERBOLOID has proven itself to be the leading design for integrity and reliability. On space platforms, ships and boats at sea, land vehicles, fighter and transport aircraft, missiles, torpedoes, medical and transplant electronics, industrial and environmental controls, rail, construction, ATE and test equipment, PGA sockets, test interface stations, and other applications, HYPERBOLOID has lived up to its promise of the highest reliability connector available.

SPECIFICATIONS

MATERIALS:

Pin Contacts:	PhBr per ASTM B139, BeCu per ASTM B196 or B197, or Cu alloy
Pin Diameter:	.030” (.76mm)
Socket Contacts:	
Contact Wires:	BeCu per ASTM B196, or B197
Termination:	PhBr per ASTM B139 or Cu alloy
Support Elements:	Cu alloy
SMT Leads:	PhBr per ASTM B139
Hardware:	Corrosion resistant steel per ASTM A582 (‘D’ shaped guide receptacles are BeCu per ASTM B196 or B197) or Cu alloy
Insulator:	Modified polyphenylene sulfide per MIL-M-24519, Type GST-40F Diallyl Phthalate per ASTM D5948 (Not for New Designs)
Pin Shields:	Aluminum 5052-H32 per QQ-A-250/8

FINISHES:

Pin Contacts:	Gold per ASTM B488 Type II, Class 1.27, Code C over Nickel, 0.000050 min., per MIL-DTL-55302 over Copper per SAE AMS 2418 or ASTM B734
Socket Contacts:	
Contact Wires:	Gold per ASTM B488 Type II, Class 1.27, Code C over Nickel, 0.000050 min., per MIL-DTL-55302 over Copper per SAE AMS 2418 or ASTM B734
Termination:	Gold per ASTM B488, Class 0.50, Grade C over Nickel, 0.000050 min., per MIL-DTL-55302 over Copper per SAE AMS 2418 or ASTM B734 or solder dip over Nickel, 0.000050 min., per MIL-DTL-55302 over Copper per SAE AMS 2418 or ASTM B734
Support Elements:	Nickel, 0.000050 min., over Copper per SAE AMS 2418 or ASTM B734
SMT Leads:	Tin/Lead per SAE-AMS-P-81728
Hardware:	Passivate per SAE-AMS2700 except BeCu hardware to be Nickel plate, 0.000050 min.
Pin Shields:	Black Anodize per MIL-A-8625, Type II, Class 2

PERFORMANCE:

Current Rating:	5* amp continuous (higher ratings may be supported-contact factory)
Insulation Resistance:	5000 megaohms min. – EIA-364-21 & MIL-DTL-55302 (par. 4.5.8)
Contact Resistance:	8 milliohms max, - EIA-364-06 & MIL-DTL-55302 (par. 4.5.5)
Test Voltage (DWV):	1000 VAC RMS @ sea level - EIA-364-20 & MIL-DTL-55302 (par. 4.5.7.1) 300VAC RMS @ 70,000 ft.
Temperature:	-65°C to +125°C (-86°F to +257°F)
Mating Force:	0.15 lbs. x number of contacts, max. - MIL-STD-55302 (par. 4.5.4)
De-mating Force:	0.04 lbs. x number of contacts, min. - MIL-STD-55302 (par. 4.5.4)
Contact Life:	100,000 mating cycles – Exceeds MIL-DTL-55302 (par. 4.5.9)
Solderability:	IPC/EIA J-STD-002, Category 3
Humidity:	IAW EIA-364-31, Method IV, except 7A & 7B (not required)
Vibration:	IAW EIA-364-28 & MIL-DTL-55302 (par. 4.5.10)
Shock:	IAW EIA-364-27 & MIL-DTL-55302 (par. 4.5.14)
Salt Spray:	IAW EIA-364-26 & MIL-DTL-55302 (par. 4.5.11)
Temperature Cycling:	IAW EIA-364-32 & MIL-DTL-55302 (par. 4.5.13)

DIMENSIONS: Catalog product dimensions are nominal. For linear and positional tolerances, contact factory.

* Ampacity ratings shown are derated in accordance with the published military specifications. For stand-alone, full service ratings, supported by test data, please refer to IEH’s Contacts Catalog, or contact the factory.

All information contained herein is believed to be reliable as of the date of publication, but is subject to change without notice. Current product drawings and specifications are available upon request from IEH.

IEH warrants its products to be free of defects affecting normal use. If any shipment is found to be defective we will accept return for repair or replacement at our option within one year of shipment. IEH is not responsible for incidental or consequential damages arising out of the use of our products.

ORDERING CHART
2-ROW

HGM	010	F	D	E	1	X	99	E	000

Series

Contact Capacity
(Use All 3 Places)

Contact Gender/Insulator	
F	Socket/Receptacle Low Profile (.335)
M	Pin/Plug High Profile (.400)[1]
M	Pin/Receptacle Low Profile (.335)[2]
P	Pin/Plug Low Profile (.335)
R	Pin/Plug High Profile (.400)
S	Socket/Plug Low Profile (.335)

Termination Style	
A	Stacking
B	Flex Cable
D	Dip Solder Straight
E	Dip Solder Right Angle
L	Compliant Right Angle
R	Surface Mount
S	Solder Cup
V	Compliant
W	Wire Wrap
X	Solder Cup Right Angle
Contact Factory - Not Available In Every Configuration	

Insulator	
A	Diallyl Phthalate (Green) - Not For New Designs
E	Polyphenylene Sulfide (Ryton-Brown)

Termination Length - "L"			
Code	Dip Solder	Wire Wrap	Flex
1	.109	.375	.050
2	.140	.500	.098
3	.172	.625	-
4	.234	-	-
9	User Defined		
0	Use For Solder Cup & Compliant Without Extension		
A	Use For Compliant With Stacking Extension		

Variation Code - Factory Assigned	
Not Required When MIL-DTL-55302 Ordered	
020	Solder Dip Terminals
0C0	Epoxy Termination Sealed
0C2	Epoxy Sealed & Solder Dipped

Mounting Style	
A	Thru Hole Mtg.
B	Thru Hole Insert
C	Threaded Insert
D	Remove Mtg. Ears
E	Stud/Threaded

Hardware Arrangement	
00*	Assembled as "01" without Loctite
01 - 64*	Y - "D" Shaped Guides (Loctite)
65 - 68	Universal
69	IEH Standard Loctite Applied
70 - 72	See Appendix
97	2 Pin Guides Unassembled
98	2 Socket Guides Unassembled
99	1 Pin & Socket Unassembled
*Use with MIL-C-55302 Callout	

Hardware Style	
A	Round Guides w/ Mtg. Stud
B	"D" Shaped Guides w/ Mtg. Stud (Polarizing)
H	Short Rotating (Int. Hex)
K	Fixed Locking
L	Long Rotating (Slotted)
M	Med. Rotating (Slotted)
P	Rotating (Hex)
S	Short Rotating (Slotted)
T	Fixed Locking w/ Mtg. Stud
X	Round Guides
Y	"D" Shaped Guides (Polarizing)
0	No Hardware Supplied

Notes:
1. For Termination Style E, X, L.
2. For Termination Style A, B, D, R, S, V, W

RECEPTACLE, STACKING
STYLE FAE9, FVEA

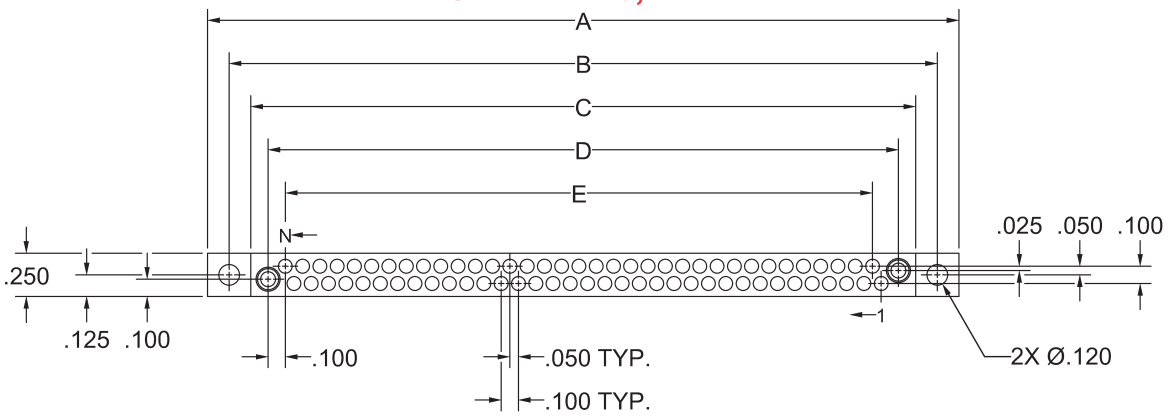

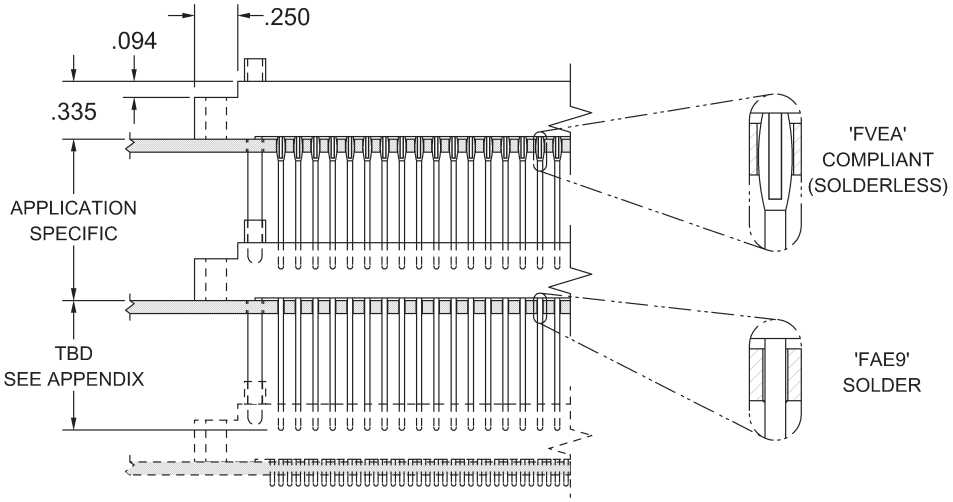

'N' Contacts	A	B	C	D	E
010	1.350	1.100	.850	.650	.400
014	1.550	1.300	1.050	.850	.600
020	1.850	1.600	1.350	1.150	.900
024	2.050	1.800	1.550	1.350	1.100
026	2.150	1.900	1.650	1.450	1.200
030	2.350	2.100	1.850	1.650	1.400
036	2.650	2.400	2.150	1.950	1.700
040	2.850	2.600	2.350	2.150	1.900
044	3.050	2.800	2.550	2.350	2.100
050	3.350	3.100	2.850	2.650	2.400
054	3.550	3.300	3.050	2.850	2.600
056	3.650	3.400	3.150	2.950	2.700
060	3.850	3.600	3.350	3.150	2.900
066	4.150	3.900	3.650	3.450	3.200
070	4.350	4.100	3.850	3.650	3.400

REFER TO APPENDIX FOR TERMINATION DETAILS, HARDWARE STYLES, POLARIZATION CHART, AND PWB PATTERNS

RECEPTACLE, STRAIGHT
STYLE FBE, FDE, FSE, FWE

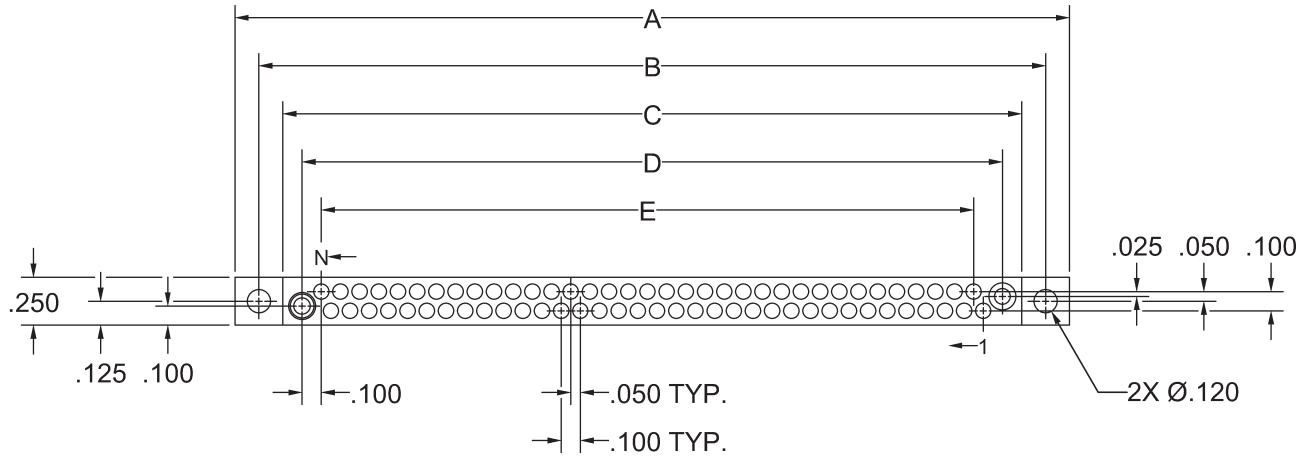

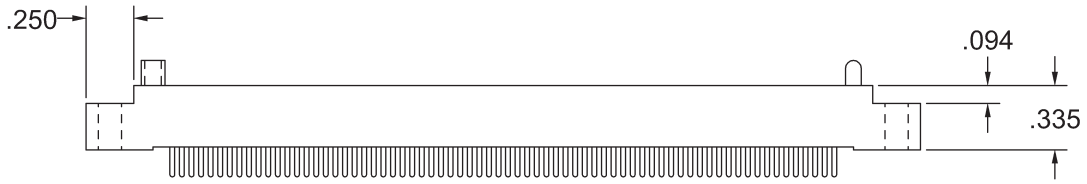

'N' Contacts	A	B	C	D	E
010	1.350	1.100	.850	.650	.400
014	1.550	1.300	1.050	.850	.600
020	1.850	1.600	1.350	1.150	.900
024	2.050	1.800	1.550	1.350	1.100
026	2.150	1.900	1.650	1.450	1.200
030	2.350	2.100	1.850	1.650	1.400
036	2.650	2.400	2.150	1.950	1.700
040	2.850	2.600	2.350	2.150	1.900
044	3.050	2.800	2.550	2.350	2.100
050	3.350	3.100	2.850	2.650	2.400
054	3.550	3.300	3.050	2.850	2.600
056	3.650	3.400	3.150	2.950	2.700
060	3.850	3.600	3.350	3.150	2.900
066	4.150	3.900	3.650	3.450	3.200
070	4.350	4.100	3.850	3.650	3.400

REFER TO APPENDIX FOR TERMINATION DETAILS, HARDWARE STYLES, POLARIZATION CHART, AND PWB PATTERNS

RECEPTACLE, RIGHT ANGLE
STYLE FEE

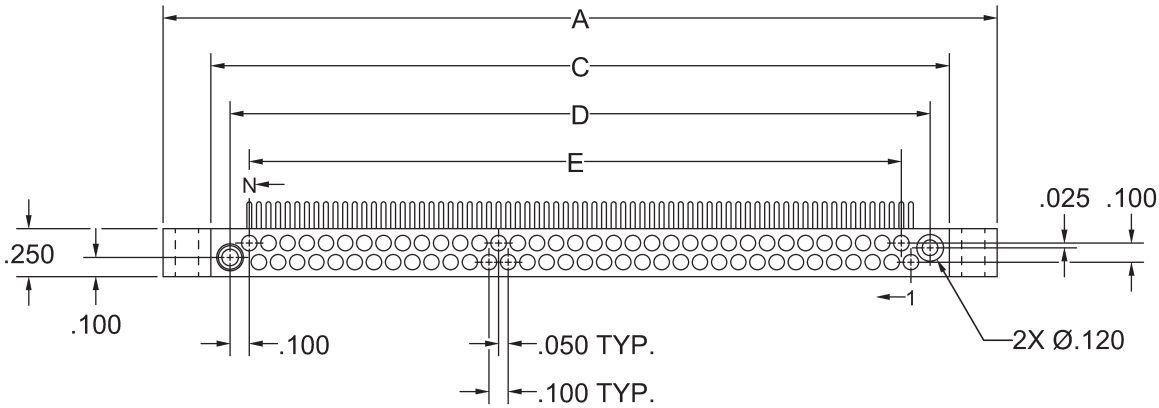

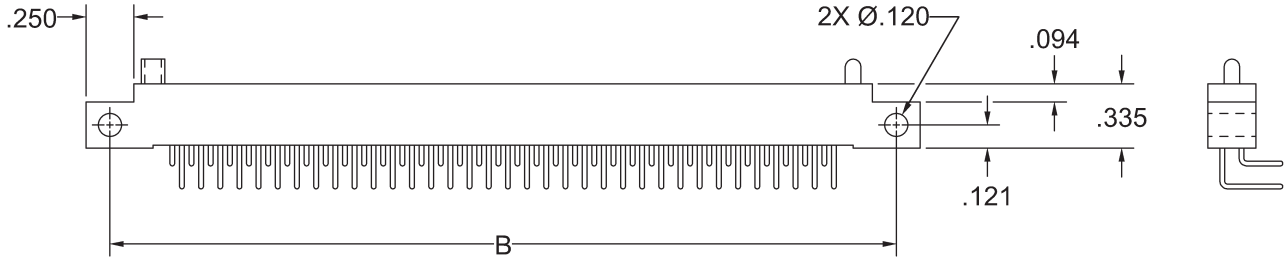

'N' Contacts	A	B	C	D	E
010	1.350	1.100	.850	.650	.400
014	1.550	1.300	1.050	.850	.600
020	1.850	1.600	1.350	1.150	.900
024	2.050	1.800	1.550	1.350	1.100
026	2.150	1.900	1.650	1.450	1.200
030	2.350	2.100	1.850	1.650	1.400
036	2.650	2.400	2.150	1.950	1.700
040	2.850	2.600	2.350	2.150	1.900
044	3.050	2.800	2.550	2.350	2.100
050	3.350	3.100	2.850	2.650	2.400
054	3.550	3.300	3.050	2.850	2.600
056	3.650	3.400	3.150	2.950	2.700
060	3.850	3.600	3.350	3.150	2.900
066	4.150	3.900	3.650	3.450	3.200
070	4.350	4.100	3.850	3.650	3.400

REFER TO APPENDIX FOR TERMINATION DETAILS, HARDWARE STYLES, POLARIZATION CHART, AND PWB PATTERNS

RECEPTACLE, SURFACE MOUNT
STYLE FRE

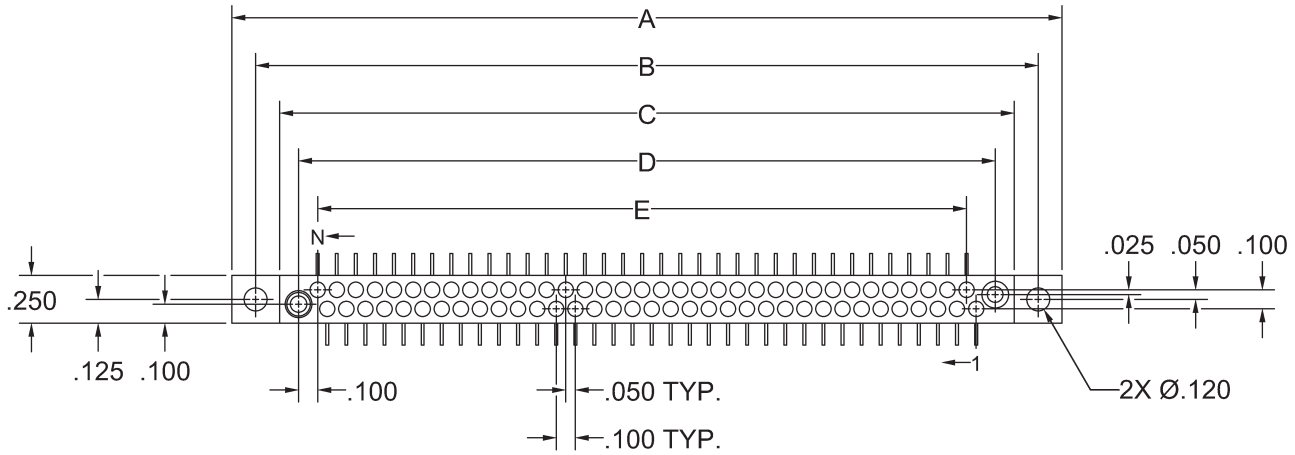

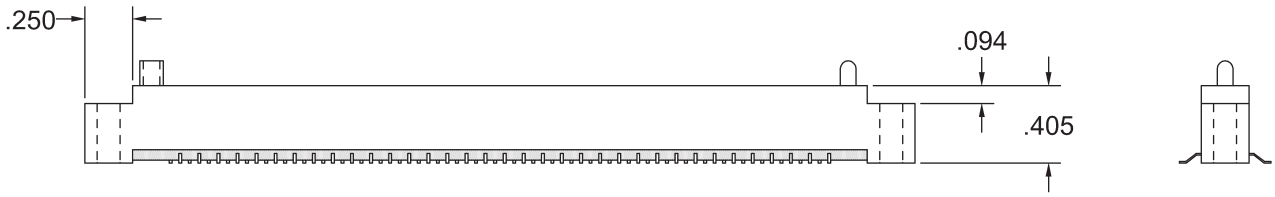

'N' Contacts	A	B	C	D	E
010	1.350	1.100	.850	.650	.400
014	1.550	1.300	1.050	.850	.600
020	1.850	1.600	1.350	1.150	.900
024	2.050	1.800	1.550	1.350	1.100
026	2.150	1.900	1.650	1.450	1.200
030	2.350	2.100	1.850	1.650	1.400
036	2.650	2.400	2.150	1.950	1.700
040	2.850	2.600	2.350	2.150	1.900
044	3.050	2.800	2.550	2.350	2.100
050	3.350	3.100	2.850	2.650	2.400
054	3.550	3.300	3.050	2.850	2.600
056	3.650	3.400	3.150	2.950	2.700
060	3.850	3.600	3.350	3.150	2.900
066	4.150	3.900	3.650	3.450	3.200
070	4.350	4.100	3.850	3.650	3.400

REFER TO APPENDIX FOR TERMINATION DETAILS, HARDWARE STYLES, POLARIZATION CHART, AND PWB PATTERNS

RECEPTACLE, COMPLIANT
STYLE FVE

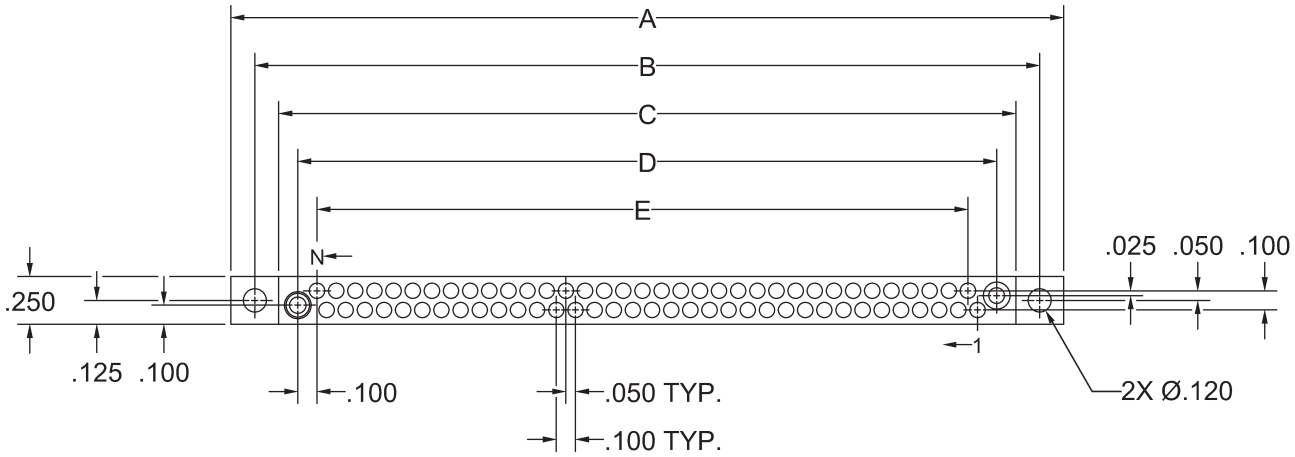

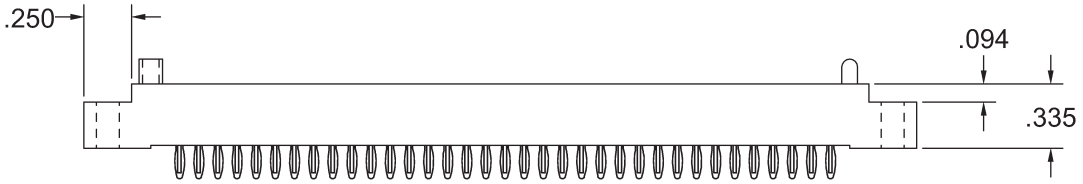

'N' Contacts	A	B	C	D	E
010	1.350	1.100	.850	.650	.400
014	1.550	1.300	1.050	.850	.600
020	1.850	1.600	1.350	1.150	.900
024	2.050	1.800	1.550	1.350	1.100
026	2.150	1.900	1.650	1.450	1.200
030	2.350	2.100	1.850	1.650	1.400
036	2.650	2.400	2.150	1.950	1.700
040	2.850	2.600	2.350	2.150	1.900
044	3.050	2.800	2.550	2.350	2.100
050	3.350	3.100	2.850	2.650	2.400
054	3.550	3.300	3.050	2.850	2.600
056	3.650	3.400	3.150	2.950	2.700
060	3.850	3.600	3.350	3.150	2.900
066	4.150	3.900	3.650	3.450	3.200
070	4.350	4.100	3.850	3.650	3.400

REFER TO APPENDIX FOR TERMINATION DETAILS, HARDWARE STYLES, POLARIZATION CHART, AND PWB PATTERNS

RECEPTACLE, PLUG PATTERN, STACKING
STYLE SAE9, SVEA

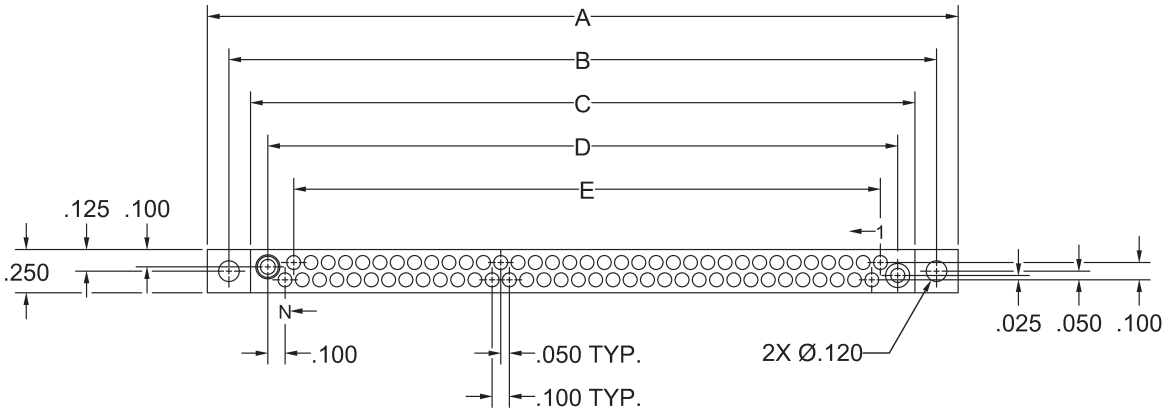

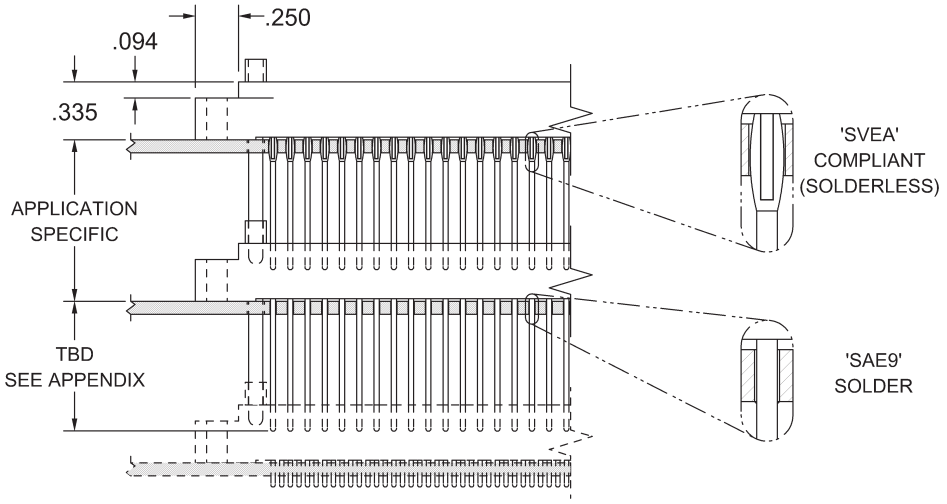

'N' Contacts	A	B	C	D	E
010	1.350	1.100	.850	.650	.400
014	1.550	1.300	1.050	.850	.600
020	1.850	1.600	1.350	1.150	.900
024	2.050	1.800	1.550	1.350	1.100
026	2.150	1.900	1.650	1.450	1.200
030	2.350	2.100	1.850	1.650	1.400
036	2.650	2.400	2.150	1.950	1.700
040	2.850	2.600	2.350	2.150	1.900
044	3.050	2.800	2.550	2.350	2.100
050	3.350	3.100	2.850	2.650	2.400
054	3.550	3.300	3.050	2.850	2.600
056	3.650	3.400	3.150	2.950	2.700
060	3.850	3.600	3.350	3.150	2.900
066	4.150	3.900	3.650	3.450	3.200
070	4.350	4.100	3.850	3.650	3.400

REFER TO APPENDIX FOR TERMINATION DETAILS, HARDWARE STYLES, POLARIZATION CHART, AND PWB PATTERNS

RECEPTACLE, PLUG PATTERN, STRAIGHT
STYLE SBE, SDE, SSE, SWE

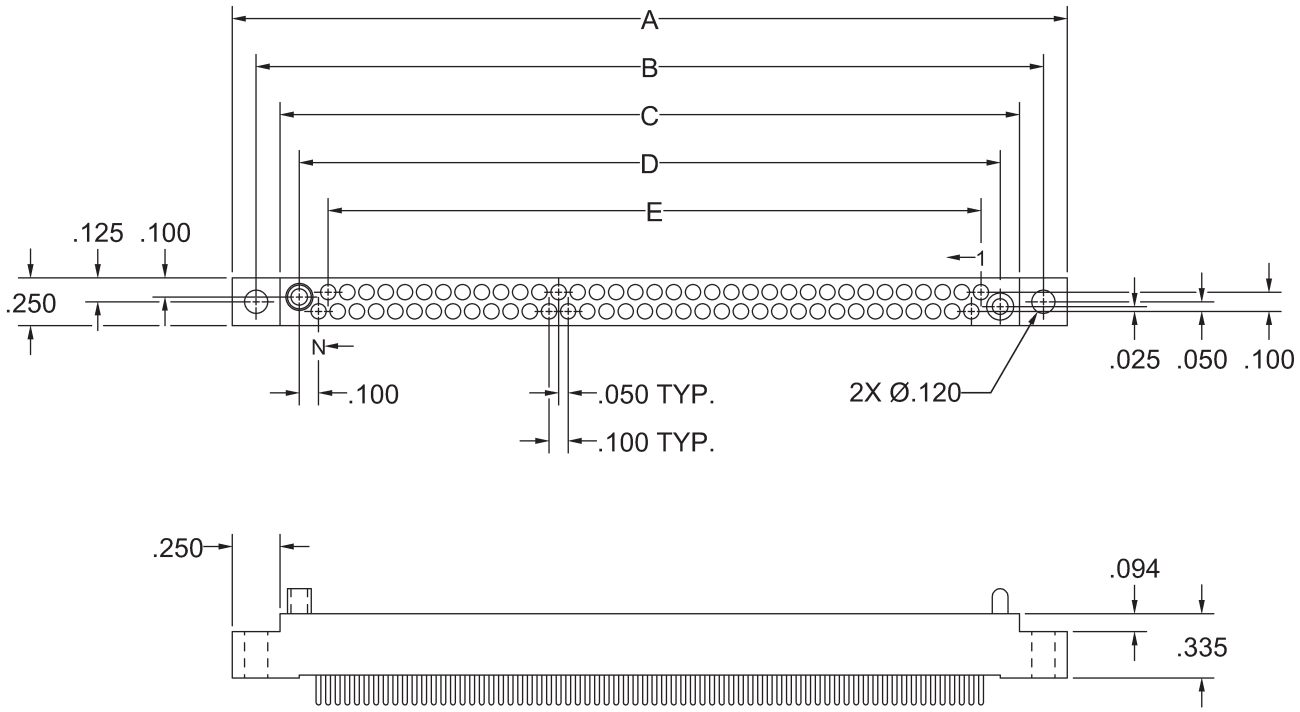

'N' Contacts	A	B	C	D	E
010	1.350	1.100	.850	.650	.400
014	1.550	1.300	1.050	.850	.600
020	1.850	1.600	1.350	1.150	.900
024	2.050	1.800	1.550	1.350	1.100
026	2.150	1.900	1.650	1.450	1.200
030	2.350	2.100	1.850	1.650	1.400
036	2.650	2.400	2.150	1.950	1.700
040	2.850	2.600	2.350	2.150	1.900
044	3.050	2.800	2.550	2.350	2.100
050	3.350	3.100	2.850	2.650	2.400
054	3.550	3.300	3.050	2.850	2.600
056	3.650	3.400	3.150	2.950	2.700
060	3.850	3.600	3.350	3.150	2.900
066	4.150	3.900	3.650	3.450	3.200
070	4.350	4.100	3.850	3.650	3.400

REFER TO APPENDIX FOR TERMINATION DETAILS, HARDWARE STYLES, POLARIZATION CHART, AND PWB PATTERNS

RECEPTACLE, PLUG PATTERN, RIGHT ANGLE
STYLE SEE

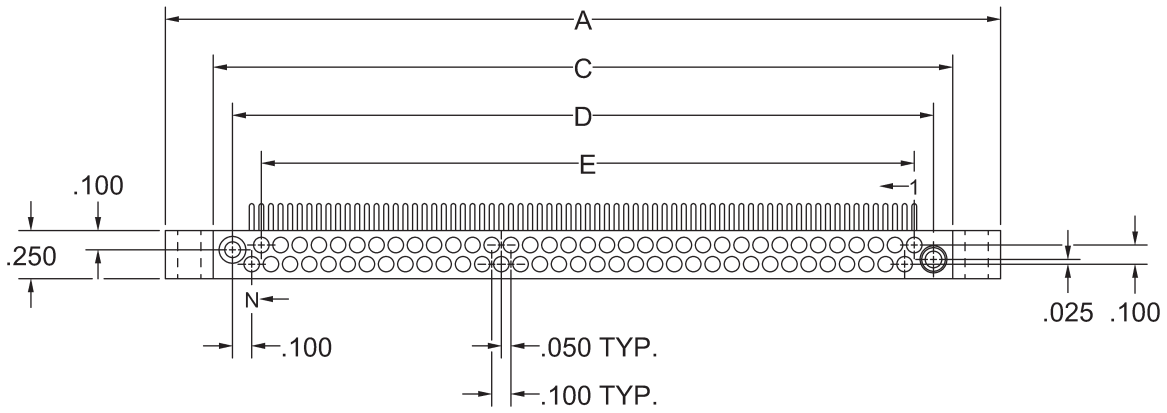

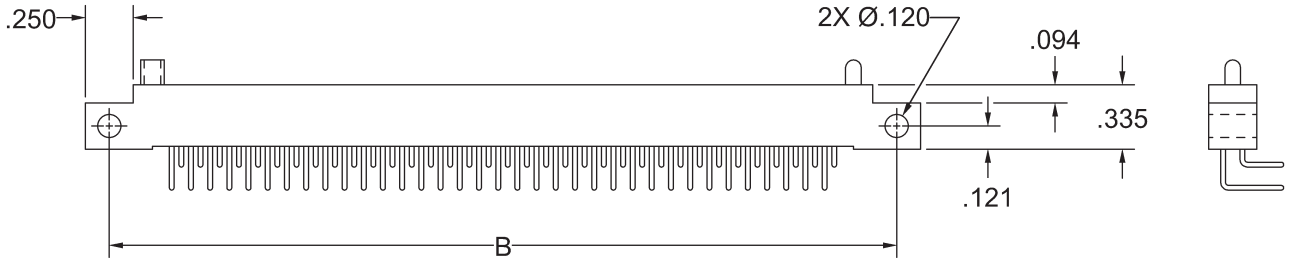

'N' Contacts	A	B	C	D	E
010	1.350	1.100	.850	.650	.400
014	1.550	1.300	1.050	.850	.600
020	1.850	1.600	1.350	1.150	.900
024	2.050	1.800	1.550	1.350	1.100
026	2.150	1.900	1.650	1.450	1.200
030	2.350	2.100	1.850	1.650	1.400
036	2.650	2.400	2.150	1.950	1.700
040	2.850	2.600	2.350	2.150	1.900
044	3.050	2.800	2.550	2.350	2.100
050	3.350	3.100	2.850	2.650	2.400
054	3.550	3.300	3.050	2.850	2.600
056	3.650	3.400	3.150	2.950	2.700
060	3.850	3.600	3.350	3.150	2.900
066	4.150	3.900	3.650	3.450	3.200
070	4.350	4.100	3.850	3.650	3.400

REFER TO APPENDIX FOR TERMINATION DETAILS, HARDWARE STYLES, POLARIZATION CHART, AND PWB PATTERNS

RECEPTACLE, PLUG PATTERN, SURFACE MOUNT
STYLE SRE

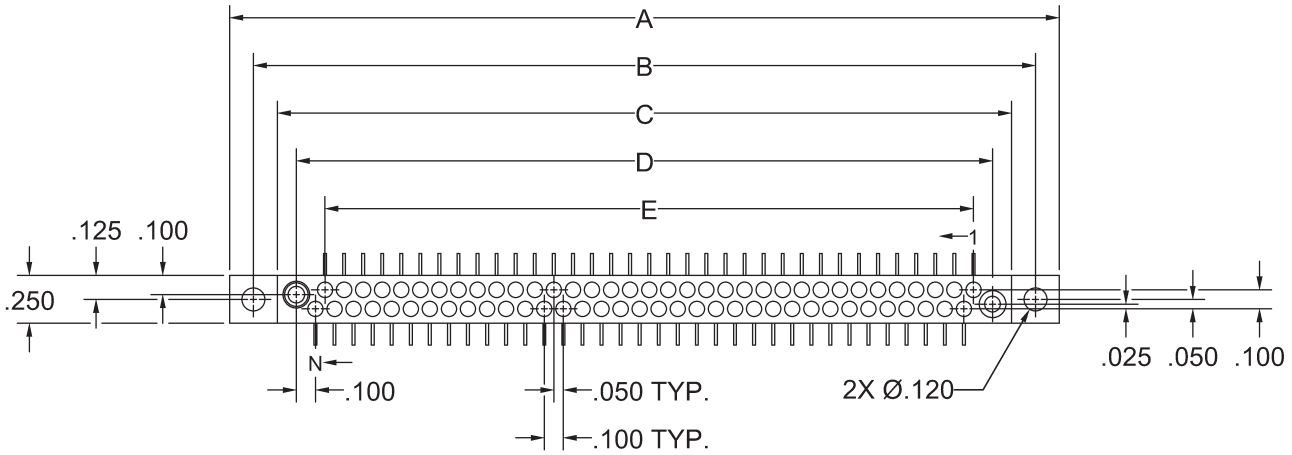

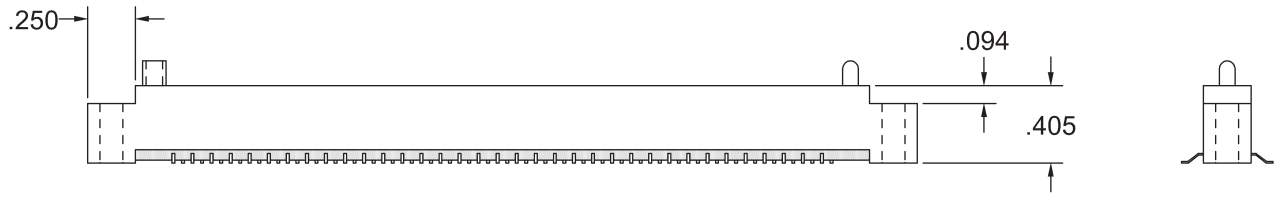

'N' Contacts	A	B	C	D	E
010	1.350	1.100	.850	.650	.400
014	1.550	1.300	1.050	.850	.600
020	1.850	1.600	1.350	1.150	.900
024	2.050	1.800	1.550	1.350	1.100
026	2.150	1.900	1.650	1.450	1.200
030	2.350	2.100	1.850	1.650	1.400
036	2.650	2.400	2.150	1.950	1.700
040	2.850	2.600	2.350	2.150	1.900
044	3.050	2.800	2.550	2.350	2.100
050	3.350	3.100	2.850	2.650	2.400
054	3.550	3.300	3.050	2.850	2.600
056	3.650	3.400	3.150	2.950	2.700
060	3.850	3.600	3.350	3.150	2.900
066	4.150	3.900	3.650	3.450	3.200
070	4.350	4.100	3.850	3.650	3.400

REFER TO APPENDIX FOR TERMINATION DETAILS, HARDWARE STYLES, POLARIZATION CHART, AND PWB PATTERNS

RECEPTACLE, PLUG PATTERN, COMPLIANT
STYLE SVE

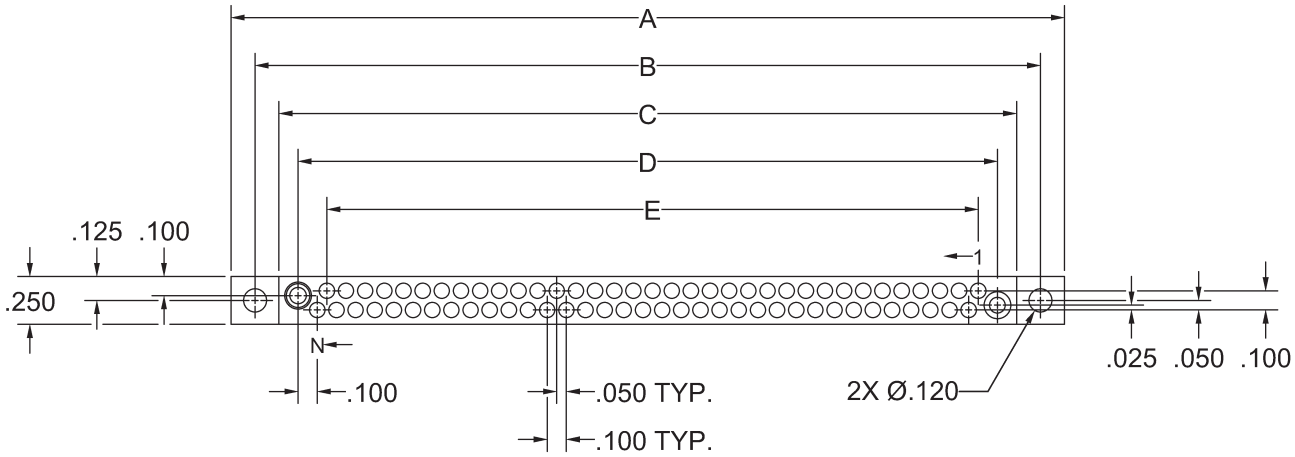

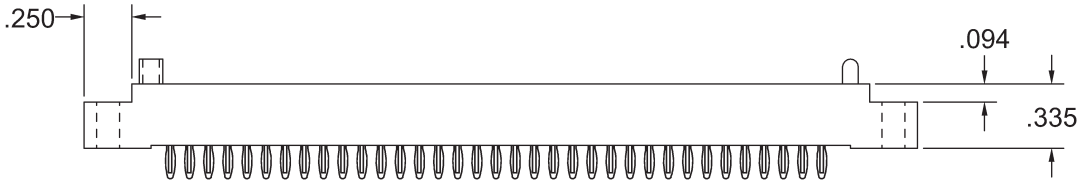

'N' Contacts	A	B	C	D	E
010	1.350	1.100	.850	.650	.400
014	1.550	1.300	1.050	.850	.600
020	1.850	1.600	1.350	1.150	.900
024	2.050	1.800	1.550	1.350	1.100
026	2.150	1.900	1.650	1.450	1.200
030	2.350	2.100	1.850	1.650	1.400
036	2.650	2.400	2.150	1.950	1.700
040	2.850	2.600	2.350	2.150	1.900
044	3.050	2.800	2.550	2.350	2.100
050	3.350	3.100	2.850	2.650	2.400
054	3.550	3.300	3.050	2.850	2.600
056	3.650	3.400	3.150	2.950	2.700
060	3.850	3.600	3.350	3.150	2.900
066	4.150	3.900	3.650	3.450	3.200
070	4.350	4.100	3.850	3.650	3.400

REFER TO APPENDIX FOR TERMINATION DETAILS, HARDWARE STYLES, POLARIZATION CHART, AND PWB PATTERNS

PLUG, RECEPTACLE PATTERN, STACKING
STYLE MAE9, MVEA

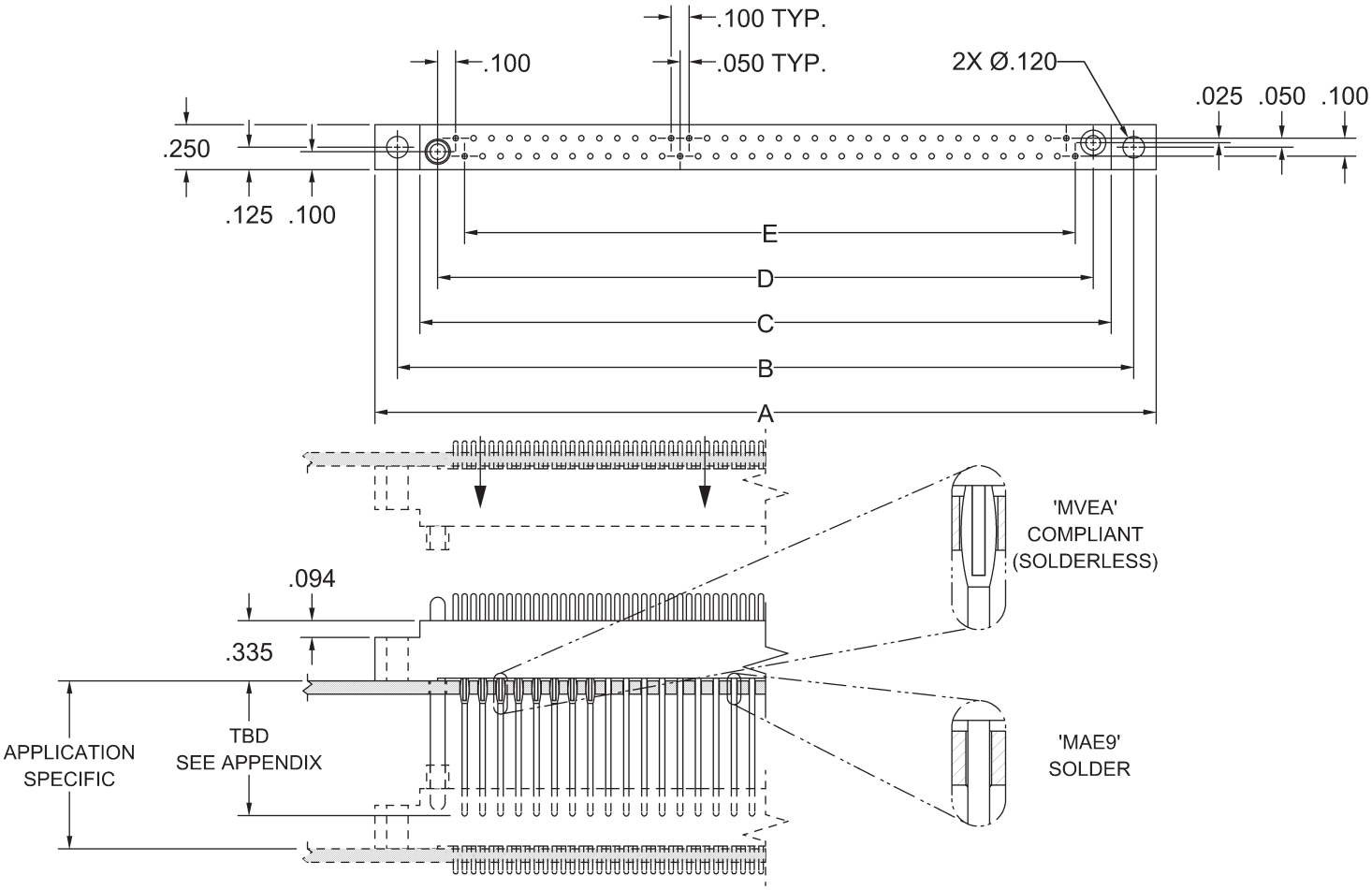

'N' Contacts	A	B	C	D	E
010	1.350	1.100	.850	.650	.400
014	1.550	1.300	1.050	.850	.600
020	1.850	1.600	1.350	1.150	.900
024	2.050	1.800	1.550	1.350	1.100
026	2.150	1.900	1.650	1.450	1.200
030	2.350	2.100	1.850	1.650	1.400
036	2.650	2.400	2.150	1.950	1.700
040	2.850	2.600	2.350	2.150	1.900
044	3.050	2.800	2.550	2.350	2.100
050	3.350	3.100	2.850	2.650	2.400
054	3.550	3.300	3.050	2.850	2.600
056	3.650	3.400	3.150	2.950	2.700
060	3.850	3.600	3.350	3.150	2.900
066	4.150	3.900	3.650	3.450	3.200
070	4.350	4.100	3.850	3.650	3.400

REFER TO APPENDIX FOR TERMINATION DETAILS, HARDWARE STYLES, POLARIZATION CHART, AND PWB PATTERNS

PLUG, RECEPTACLE PATTERN, STRAIGHT
STYLE MBE, MDE, MSE, MWE

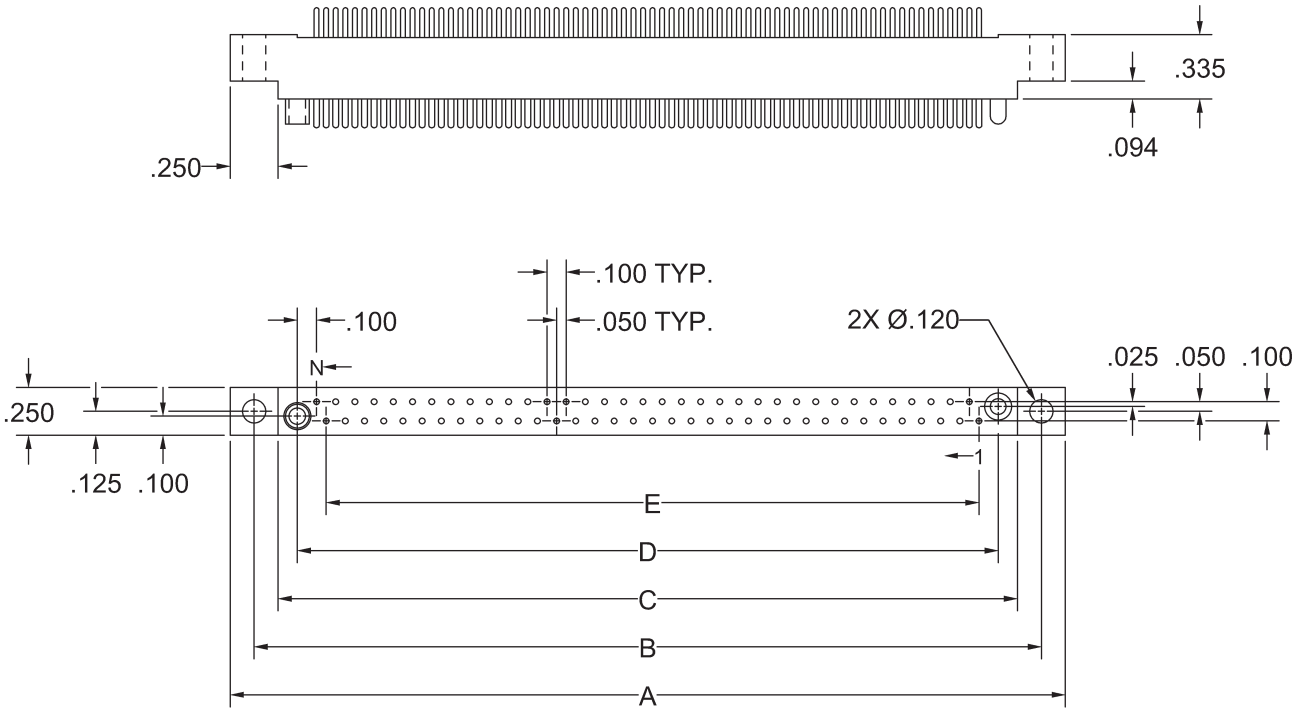

'N' Contacts	A	B	C	D	E
010	1.350	1.100	.850	.650	.400
014	1.550	1.300	1.050	.850	.600
020	1.850	1.600	1.350	1.150	.900
024	2.050	1.800	1.550	1.350	1.100
026	2.150	1.900	1.650	1.450	1.200
030	2.350	2.100	1.850	1.650	1.400
036	2.650	2.400	2.150	1.950	1.700
040	2.850	2.600	2.350	2.150	1.900
044	3.050	2.800	2.550	2.350	2.100
050	3.350	3.100	2.850	2.650	2.400
054	3.550	3.300	3.050	2.850	2.600
056	3.650	3.400	3.150	2.950	2.700
060	3.850	3.600	3.350	3.150	2.900
066	4.150	3.900	3.650	3.450	3.200
070	4.350	4.100	3.850	3.650	3.400

REFER TO APPENDIX FOR TERMINATION DETAILS, HARDWARE STYLES, POLARIZATION CHART, AND PWB PATTERNS

PLUG, RIGHT ANGLE
STYLE MEE, MXE

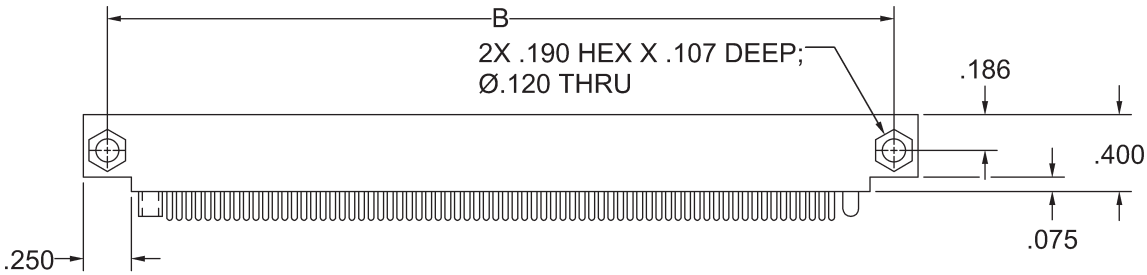

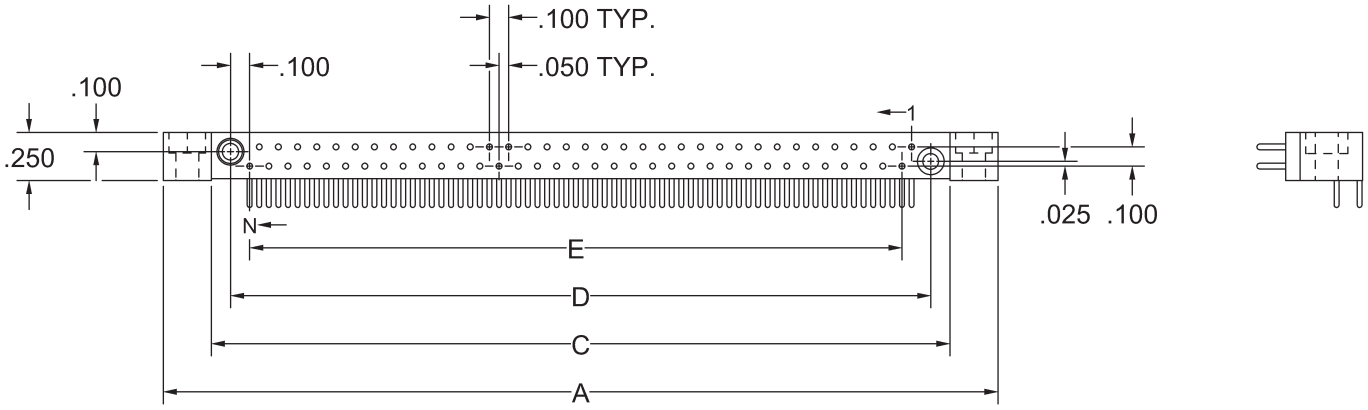

'N' Contacts	A	B	C	D	E
010	1.350	1.100	.850	.650	.400
014	1.550	1.300	1.050	.850	.600
020	1.850	1.600	1.350	1.150	.900
024	2.050	1.800	1.550	1.350	1.100
026	2.150	1.900	1.650	1.450	1.200
030	2.350	2.100	1.850	1.650	1.400
036	2.650	2.400	2.150	1.950	1.700
040	2.850	2.600	2.350	2.150	1.900
044	3.050	2.800	2.550	2.350	2.100
050	3.350	3.100	2.850	2.650	2.400
054	3.550	3.300	3.050	2.850	2.600
056	3.650	3.400	3.150	2.950	2.700
060	3.850	3.600	3.350	3.150	2.900
066	4.150	3.900	3.650	3.450	3.200
070	4.350	4.100	3.850	3.650	3.400

REFER TO APPENDIX FOR TERMINATION DETAILS, HARDWARE STYLES, POLARIZATION CHART, AND PWB PATTERNS

PLUG, RIGHT ANGLE, COMPLIANT
STYLE MLE

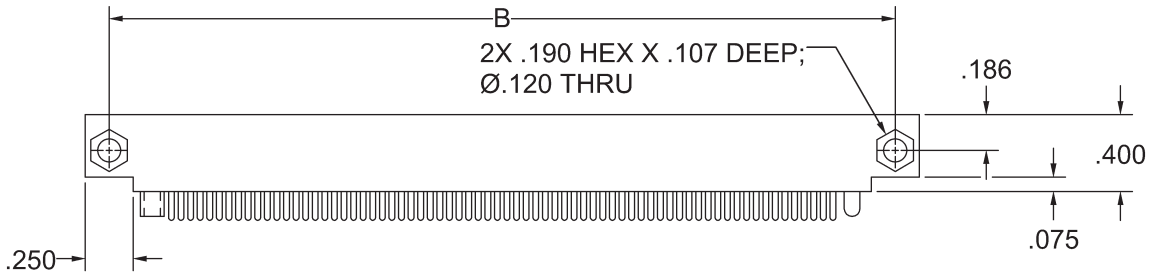

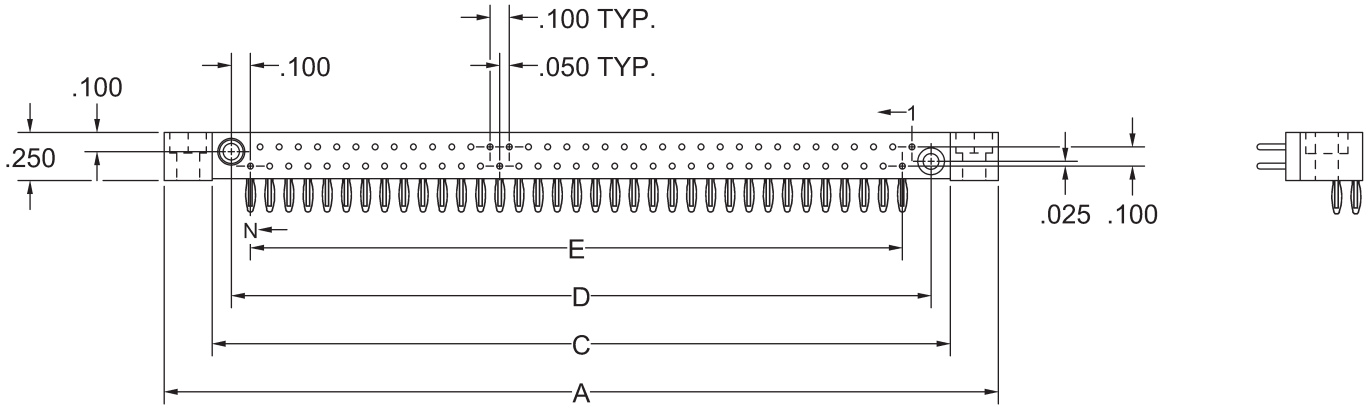

'N' Contacts	A	B	C	D	E
010	1.350	1.100	.850	.650	.400
014	1.550	1.300	1.050	.850	.600
020	1.850	1.600	1.350	1.150	.900
024	2.050	1.800	1.550	1.350	1.100
026	2.150	1.900	1.650	1.450	1.200
030	2.350	2.100	1.850	1.650	1.400
036	2.650	2.400	2.150	1.950	1.700
040	2.850	2.600	2.350	2.150	1.900
044	3.050	2.800	2.550	2.350	2.100
050	3.350	3.100	2.850	2.650	2.400
054	3.550	3.300	3.050	2.850	2.600
056	3.650	3.400	3.150	2.950	2.700
060	3.850	3.600	3.350	3.150	2.900
066	4.150	3.900	3.650	3.450	3.200
070	4.350	4.100	3.850	3.650	3.400

REFER TO APPENDIX FOR TERMINATION DETAILS, HARDWARE STYLES, POLARIZATION CHART, AND PWB PATTERNS

PLUG, RECEPTACLE PATTERN, SURFACE MOUNT
STYLE MRE

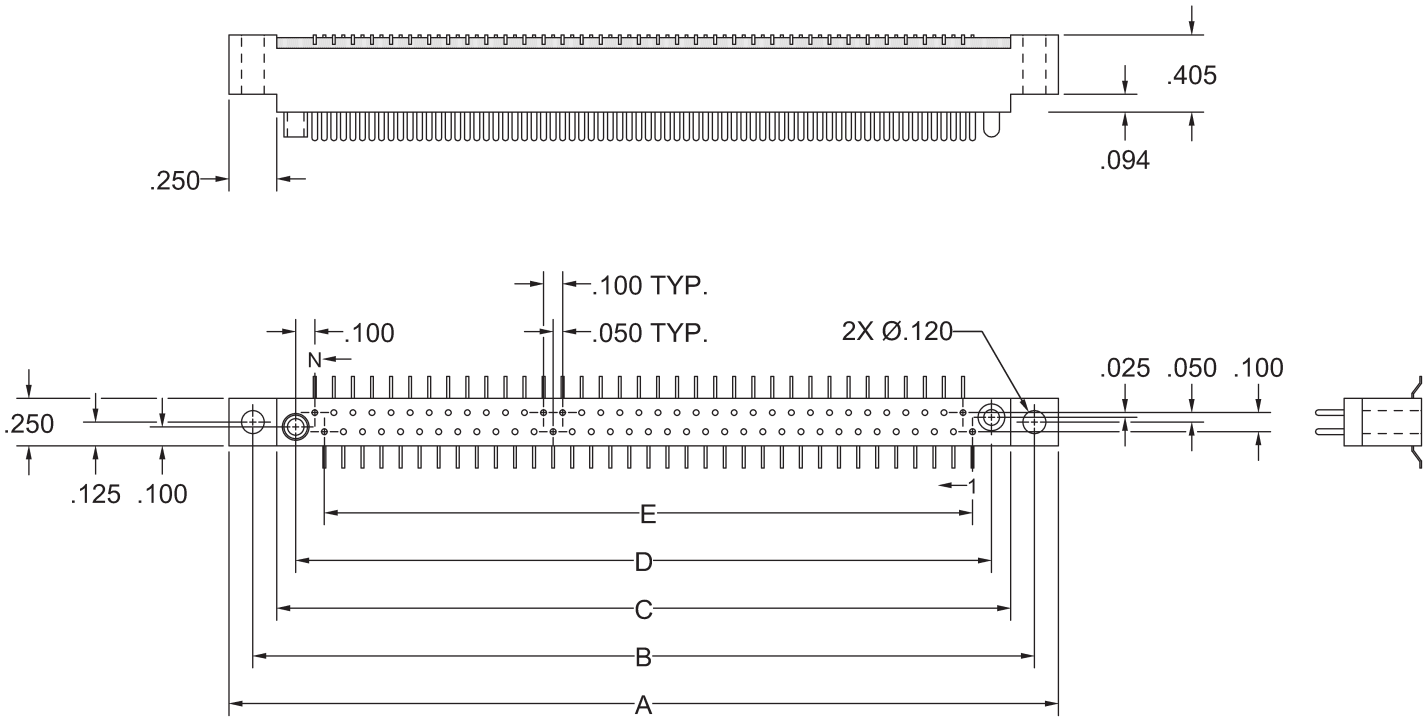

'N' Contacts	A	B	C	D	E
010	1.350	1.100	.850	.650	.400
014	1.550	1.300	1.050	.850	.600
020	1.850	1.600	1.350	1.150	.900
024	2.050	1.800	1.550	1.350	1.100
026	2.150	1.900	1.650	1.450	1.200
030	2.350	2.100	1.850	1.650	1.400
036	2.650	2.400	2.150	1.950	1.700
040	2.850	2.600	2.350	2.150	1.900
044	3.050	2.800	2.550	2.350	2.100
050	3.350	3.100	2.850	2.650	2.400
054	3.550	3.300	3.050	2.850	2.600
056	3.650	3.400	3.150	2.950	2.700
060	3.850	3.600	3.350	3.150	2.900
066	4.150	3.900	3.650	3.450	3.200
070	4.350	4.100	3.850	3.650	3.400

REFER TO APPENDIX FOR TERMINATION DETAILS, HARDWARE STYLES, POLARIZATION CHART, AND PWB PATTERNS

PLUG, RECEPTACLE PATTERN, COMPLIANT
STYLE MVE

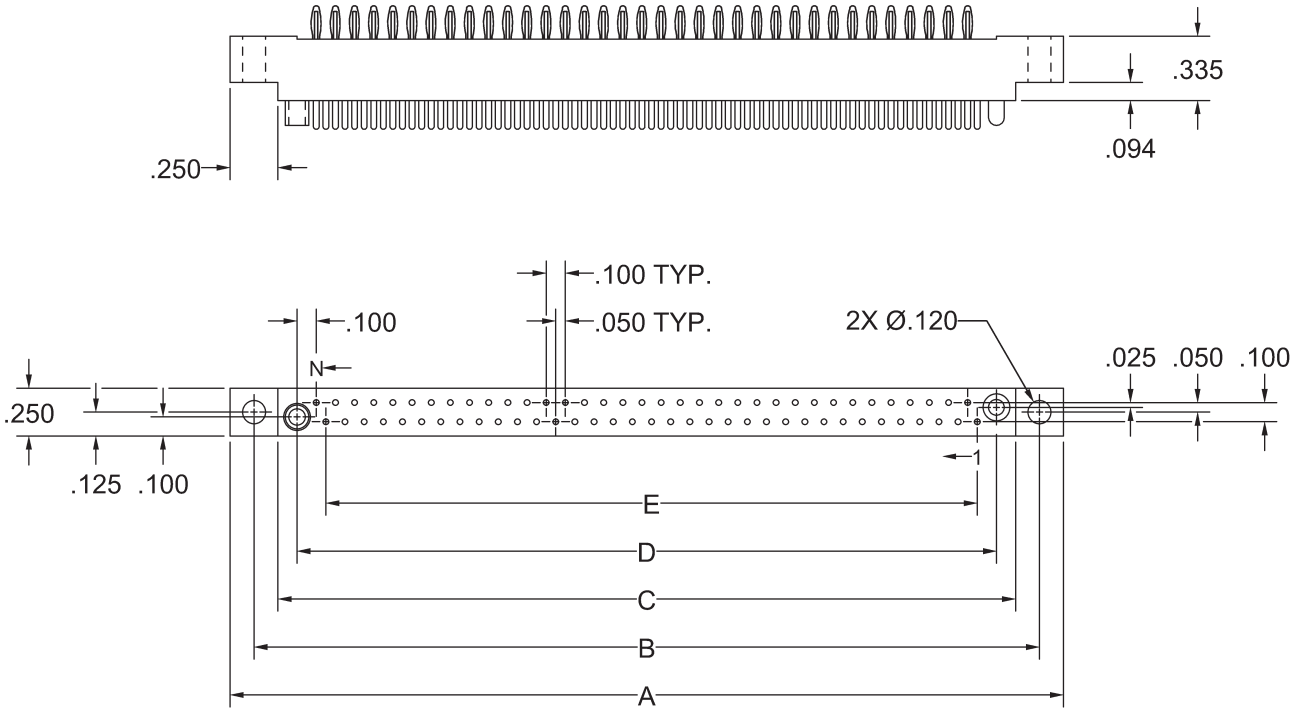

'N' Contacts	A	B	C	D	E
010	1.350	1.100	.850	.650	.400
014	1.550	1.300	1.050	.850	.600
020	1.850	1.600	1.350	1.150	.900
024	2.050	1.800	1.550	1.350	1.100
026	2.150	1.900	1.650	1.450	1.200
030	2.350	2.100	1.850	1.650	1.400
036	2.650	2.400	2.150	1.950	1.700
040	2.850	2.600	2.350	2.150	1.900
044	3.050	2.800	2.550	2.350	2.100
050	3.350	3.100	2.850	2.650	2.400
054	3.550	3.300	3.050	2.850	2.600
056	3.650	3.400	3.150	2.950	2.700
060	3.850	3.600	3.350	3.150	2.900
066	4.150	3.900	3.650	3.450	3.200
070	4.350	4.100	3.850	3.650	3.400

REFER TO APPENDIX FOR TERMINATION DETAILS, HARDWARE STYLES, POLARIZATION CHART, AND PWB PATTERNS

PLUG, STACKING
STYLE PAE9, PVEA

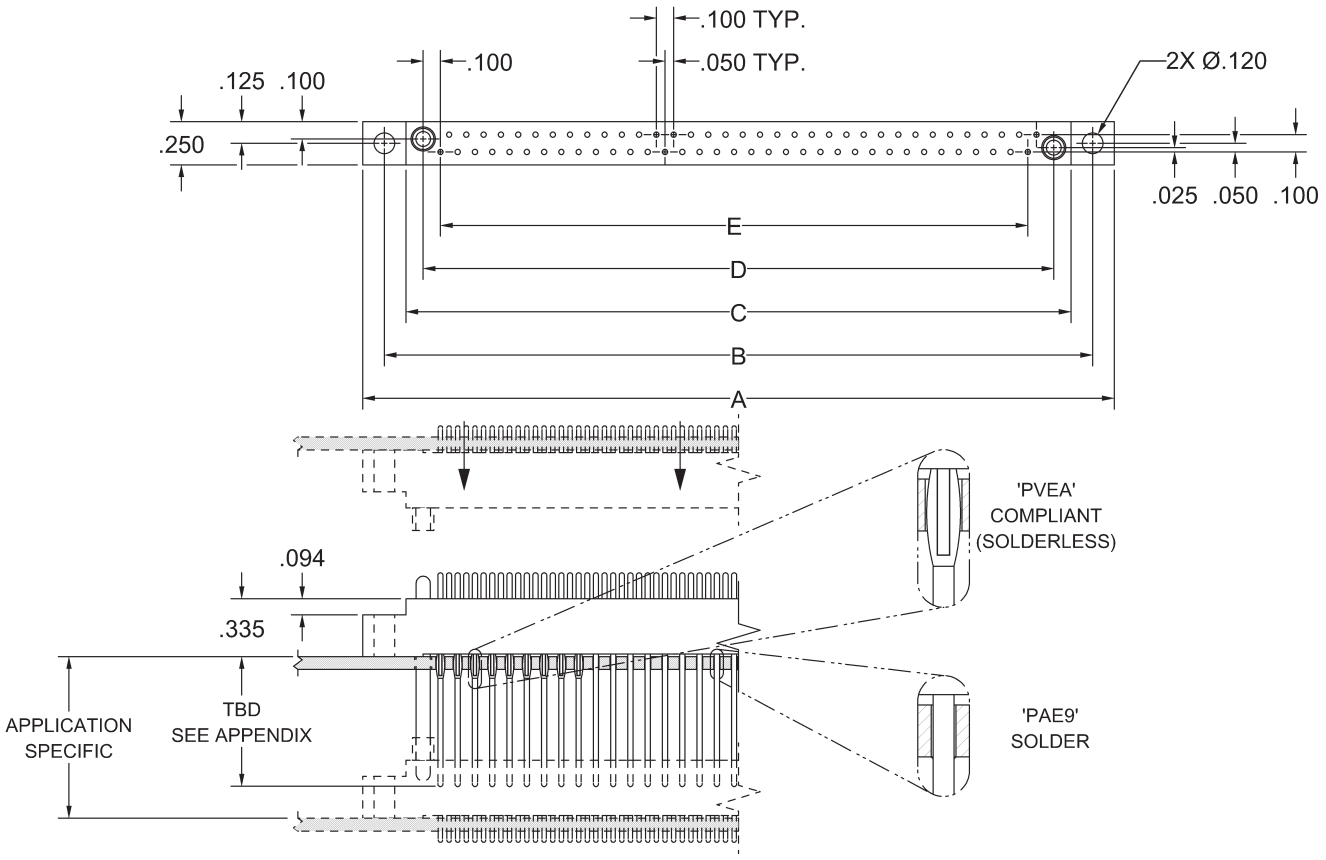

'N' Contacts	A	B	C	D	E
010	1.350	1.100	.850	.650	.400
014	1.550	1.300	1.050	.850	.600
020	1.850	1.600	1.350	1.150	.900
024	2.050	1.800	1.550	1.350	1.100
026	2.150	1.900	1.650	1.450	1.200
030	2.350	2.100	1.850	1.650	1.400
036	2.650	2.400	2.150	1.950	1.700
040	2.850	2.600	2.350	2.150	1.900
044	3.050	2.800	2.550	2.350	2.100
050	3.350	3.100	2.850	2.650	2.400
054	3.550	3.300	3.050	2.850	2.600
056	3.650	3.400	3.150	2.950	2.700
060	3.850	3.600	3.350	3.150	2.900
066	4.150	3.900	3.650	3.450	3.200
070	4.350	4.100	3.850	3.650	3.400

REFER TO APPENDIX FOR TERMINATION DETAILS, HARDWARE STYLES, POLARIZATION CHART, AND PWB PATTERNS

PLUG, STRAIGHT
STYLE PBE, PDE, PSE, PWE

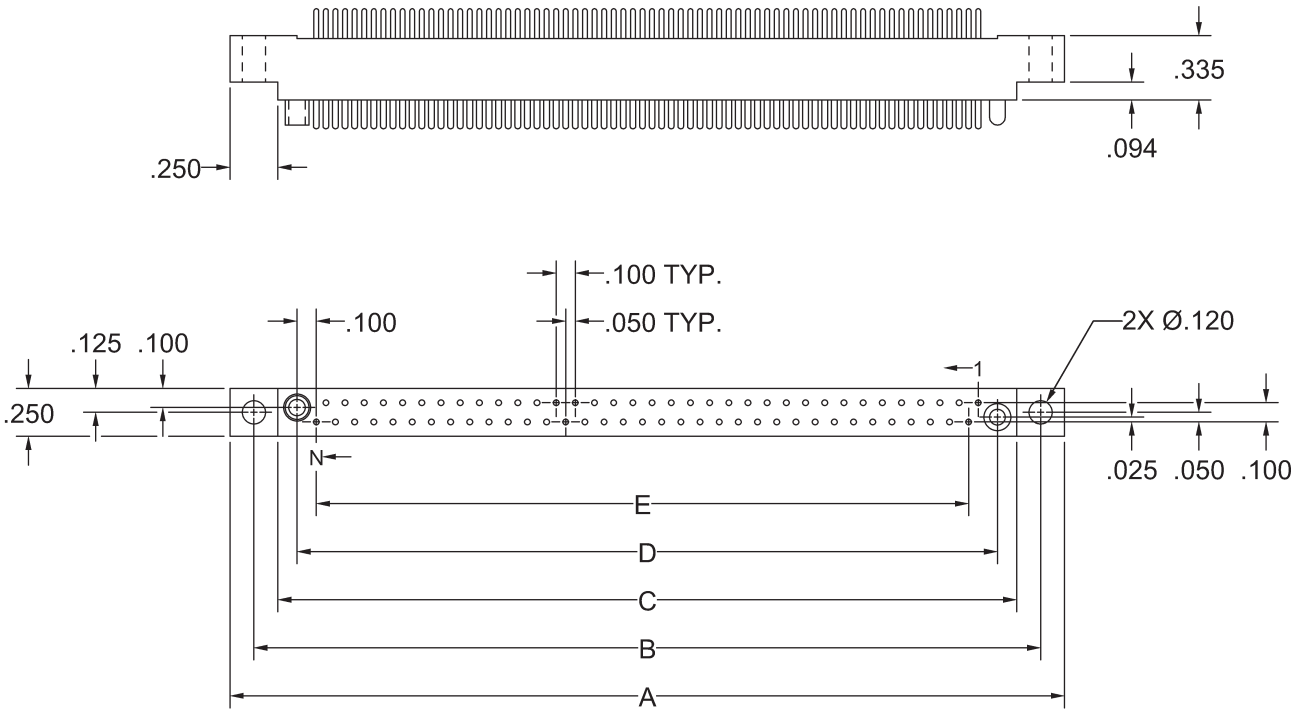

'N' Contacts	A	B	C	D	E
010	1.350	1.100	.850	.650	.400
014	1.550	1.300	1.050	.850	.600
020	1.850	1.600	1.350	1.150	.900
024	2.050	1.800	1.550	1.350	1.100
026	2.150	1.900	1.650	1.450	1.200
030	2.350	2.100	1.850	1.650	1.400
036	2.650	2.400	2.150	1.950	1.700
040	2.850	2.600	2.350	2.150	1.900
044	3.050	2.800	2.550	2.350	2.100
050	3.350	3.100	2.850	2.650	2.400
054	3.550	3.300	3.050	2.850	2.600
056	3.650	3.400	3.150	2.950	2.700
060	3.850	3.600	3.350	3.150	2.900
066	4.150	3.900	3.650	3.450	3.200
070	4.350	4.100	3.850	3.650	3.400

REFER TO APPENDIX FOR TERMINATION DETAILS, HARDWARE STYLES, POLARIZATION CHART, AND PWB PATTERNS

PLUG, SURFACE MOUNT
STYLE PRE

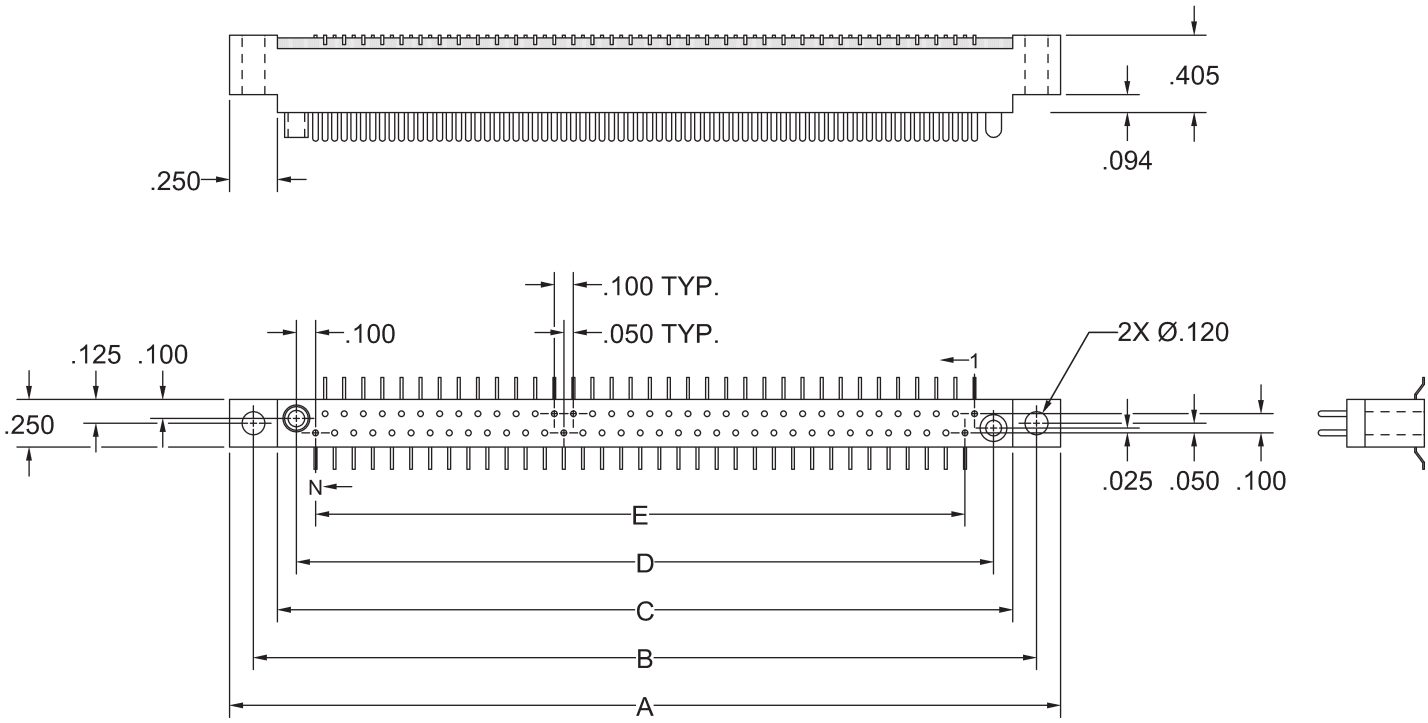

'N' Contacts	A	B	C	D	E
010	1.350	1.100	.850	.650	.400
014	1.550	1.300	1.050	.850	.600
020	1.850	1.600	1.350	1.150	.900
024	2.050	1.800	1.550	1.350	1.100
026	2.150	1.900	1.650	1.450	1.200
030	2.350	2.100	1.850	1.650	1.400
036	2.650	2.400	2.150	1.950	1.700
040	2.850	2.600	2.350	2.150	1.900
044	3.050	2.800	2.550	2.350	2.100
050	3.350	3.100	2.850	2.650	2.400
054	3.550	3.300	3.050	2.850	2.600
056	3.650	3.400	3.150	2.950	2.700
060	3.850	3.600	3.350	3.150	2.900
066	4.150	3.900	3.650	3.450	3.200
070	4.350	4.100	3.850	3.650	3.400

REFER TO APPENDIX FOR TERMINATION DETAILS, HARDWARE STYLES, POLARIZATION CHART, AND PWB PATTERNS

PLUG, COMPLIANT
STYLE PVE

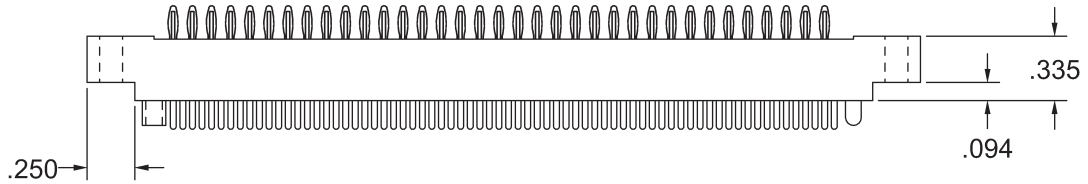

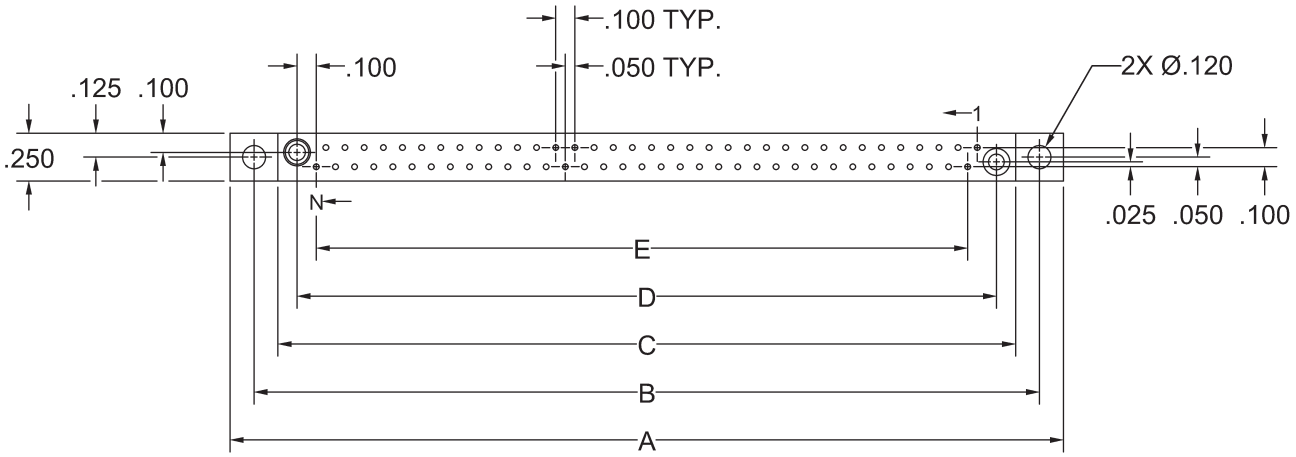

'N' Contacts	A	B	C	D	E
010	1.350	1.100	.850	.650	.400
014	1.550	1.300	1.050	.850	.600
020	1.850	1.600	1.350	1.150	.900
024	2.050	1.800	1.550	1.350	1.100
026	2.150	1.900	1.650	1.450	1.200
030	2.350	2.100	1.850	1.650	1.400
036	2.650	2.400	2.150	1.950	1.700
040	2.850	2.600	2.350	2.150	1.900
044	3.050	2.800	2.550	2.350	2.100
050	3.350	3.100	2.850	2.650	2.400
054	3.550	3.300	3.050	2.850	2.600
056	3.650	3.400	3.150	2.950	2.700
060	3.850	3.600	3.350	3.150	2.900
066	4.150	3.900	3.650	3.450	3.200
070	4.350	4.100	3.850	3.650	3.400

REFER TO APPENDIX FOR TERMINATION DETAILS, HARDWARE STYLES, POLARIZATION CHART, AND PWB PATTERNS

RECEPTACLE, STRAIGHT
STYLE HGM090 FBE, FDE, FSE, FWE

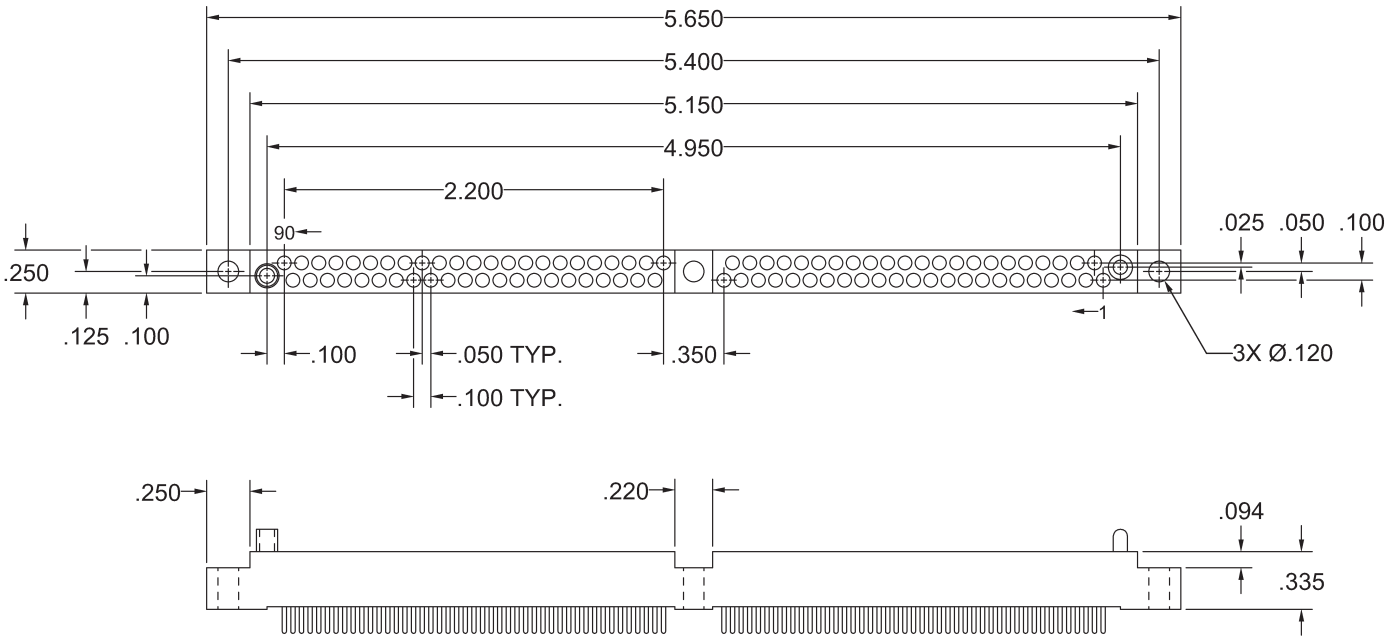

REFER TO APPENDIX FOR TERMINATION DETAILS, HARDWARE STYLES, POLARIZATION CHART, AND PWB PATTERNS

RECEPTACLE, RIGHT ANGLE
STYLE HGM090 FEE

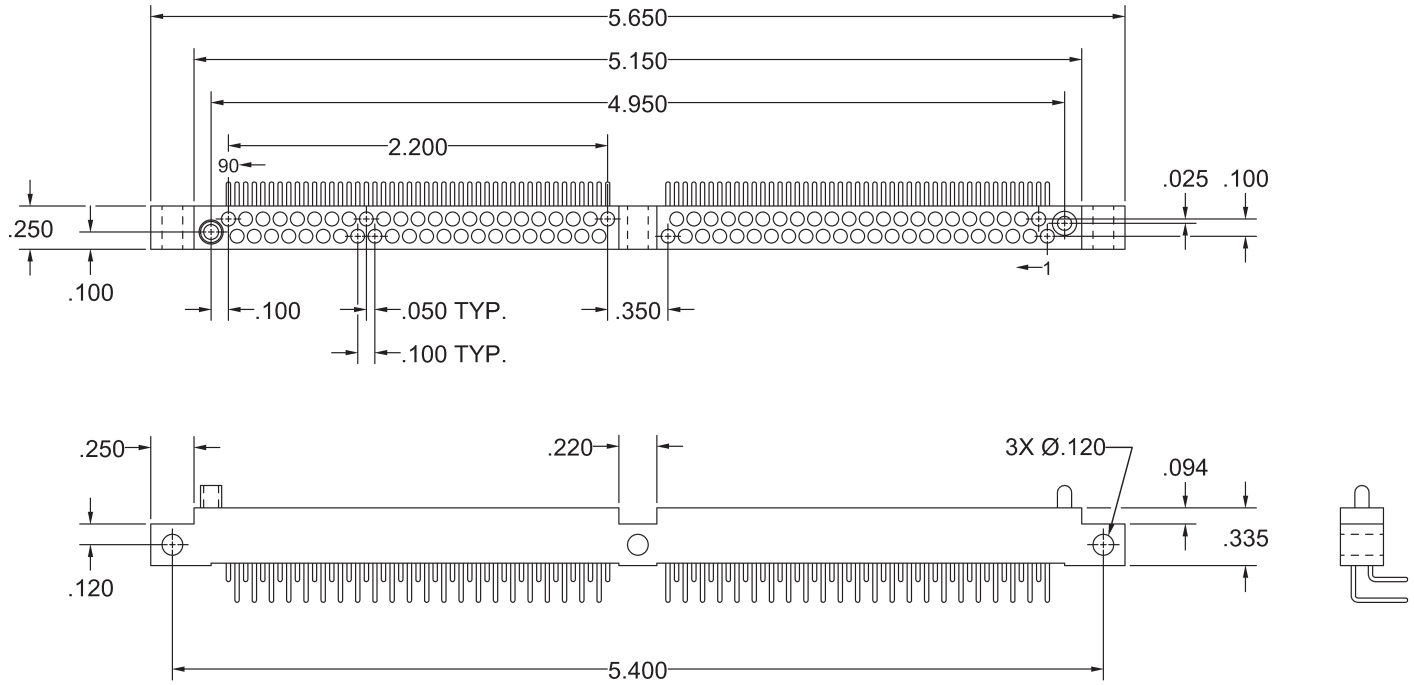

REFER TO APPENDIX FOR TERMINATION DETAILS, HARDWARE STYLES, POLARIZATION CHART, AND PWB PATTERNS

RECEPTACLE, SURFACE MOUNT
STYLE HGM090 FRE

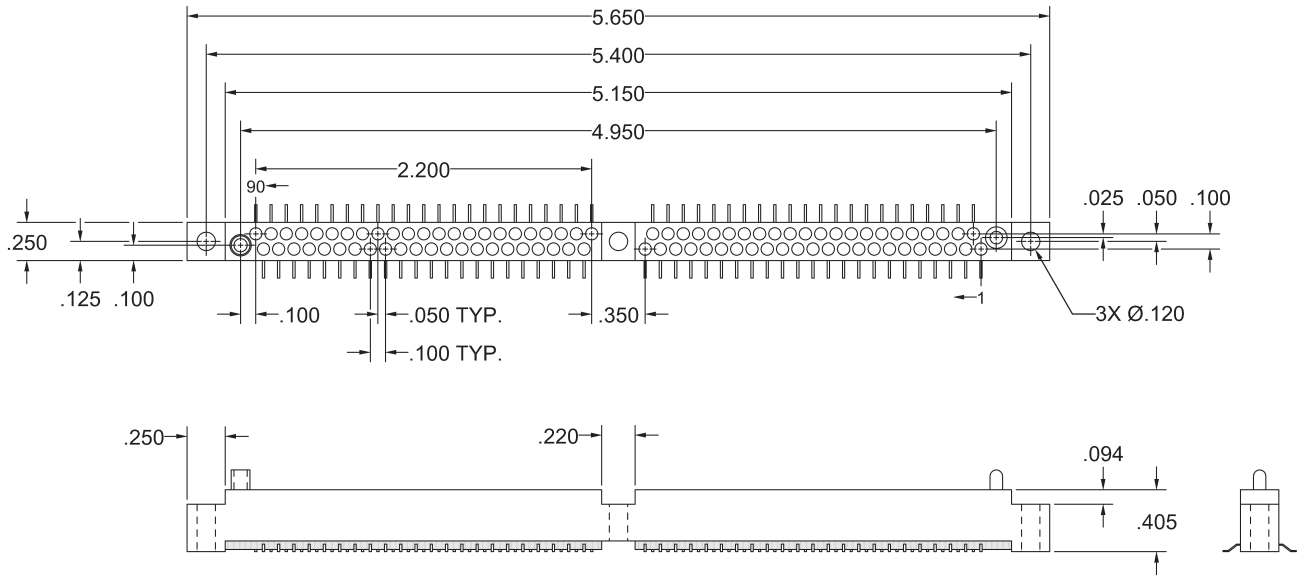

REFER TO APPENDIX FOR TERMINATION DETAILS, HARDWARE STYLES, POLARIZATION CHART, AND PWB PATTERNS

RECEPTACLE, COMPLIANT
STYLE HGM090 FVE

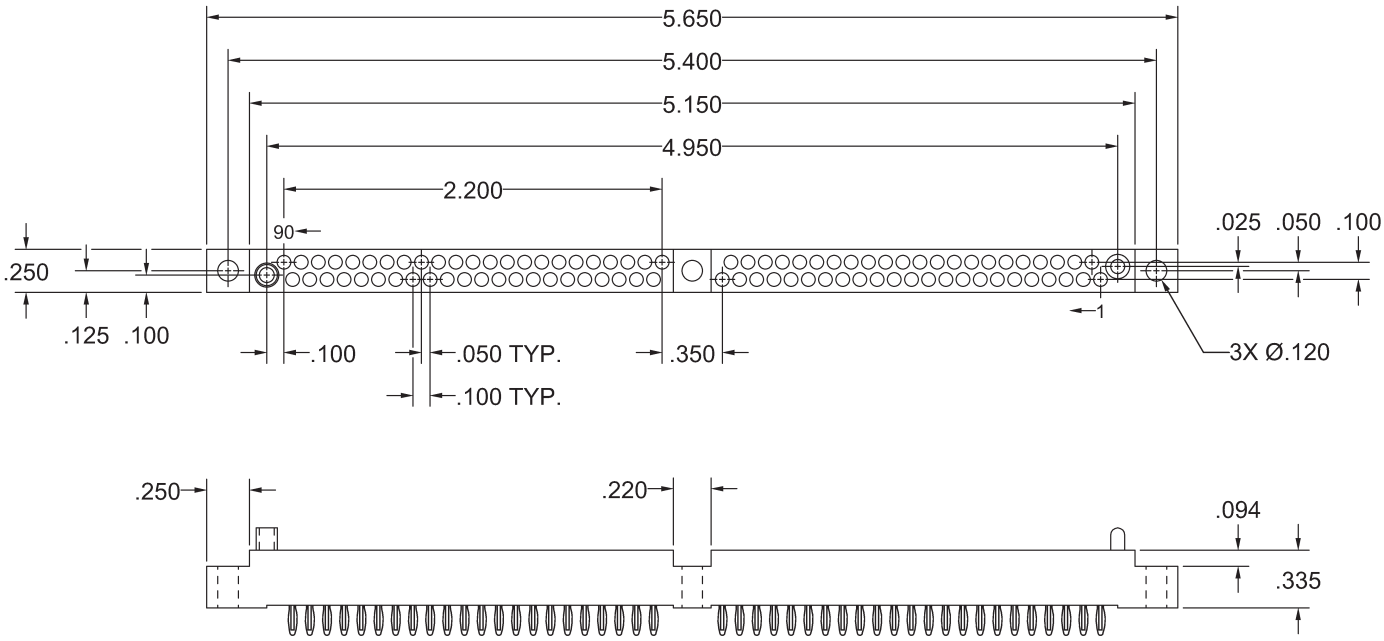

REFER TO APPENDIX FOR TERMINATION DETAILS, HARDWARE STYLES, POLARIZATION CHART, AND PWB PATTERNS

PLUG, RIGHT ANGLE
STYLE HGM090 MEE

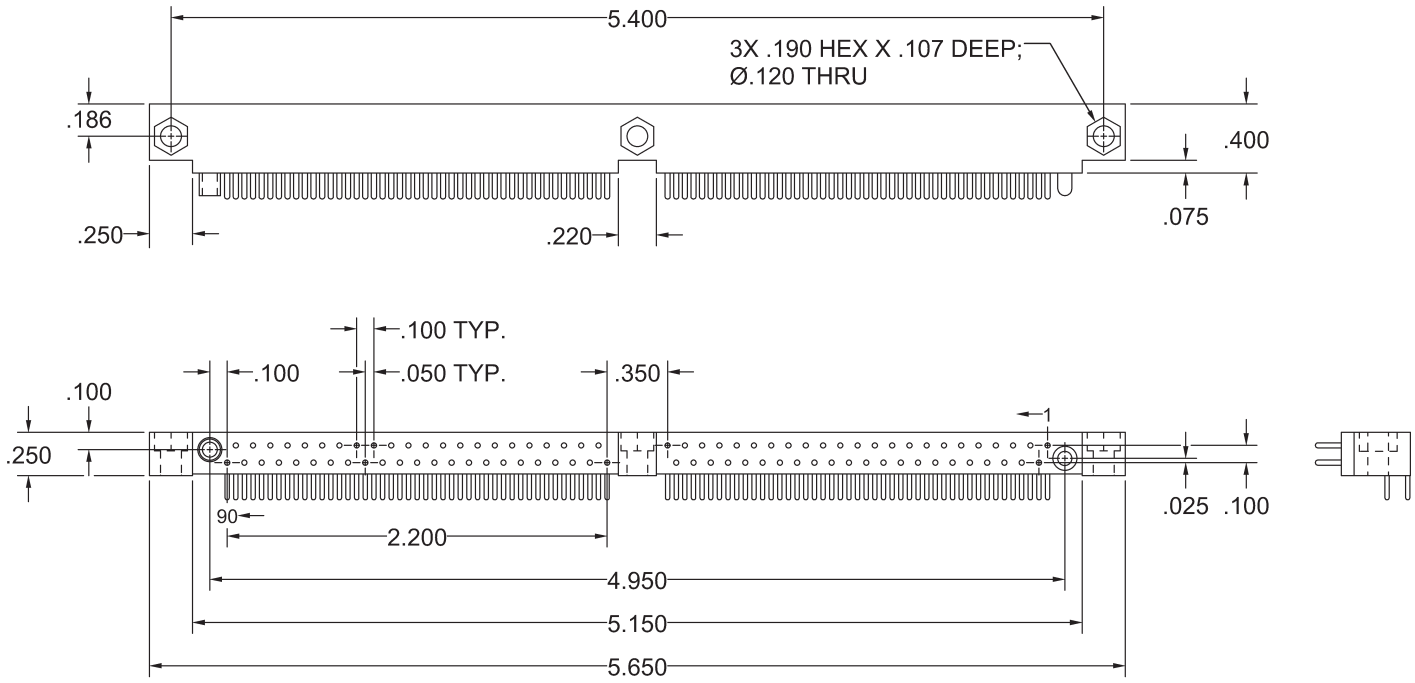

REFER TO APPENDIX FOR TERMINATION DETAILS, HARDWARE STYLES, POLARIZATION CHART, AND PWB PATTERNS

PLUG, STRAIGHT
STYLE HGM090 RBE, RDE, RSE, RWE

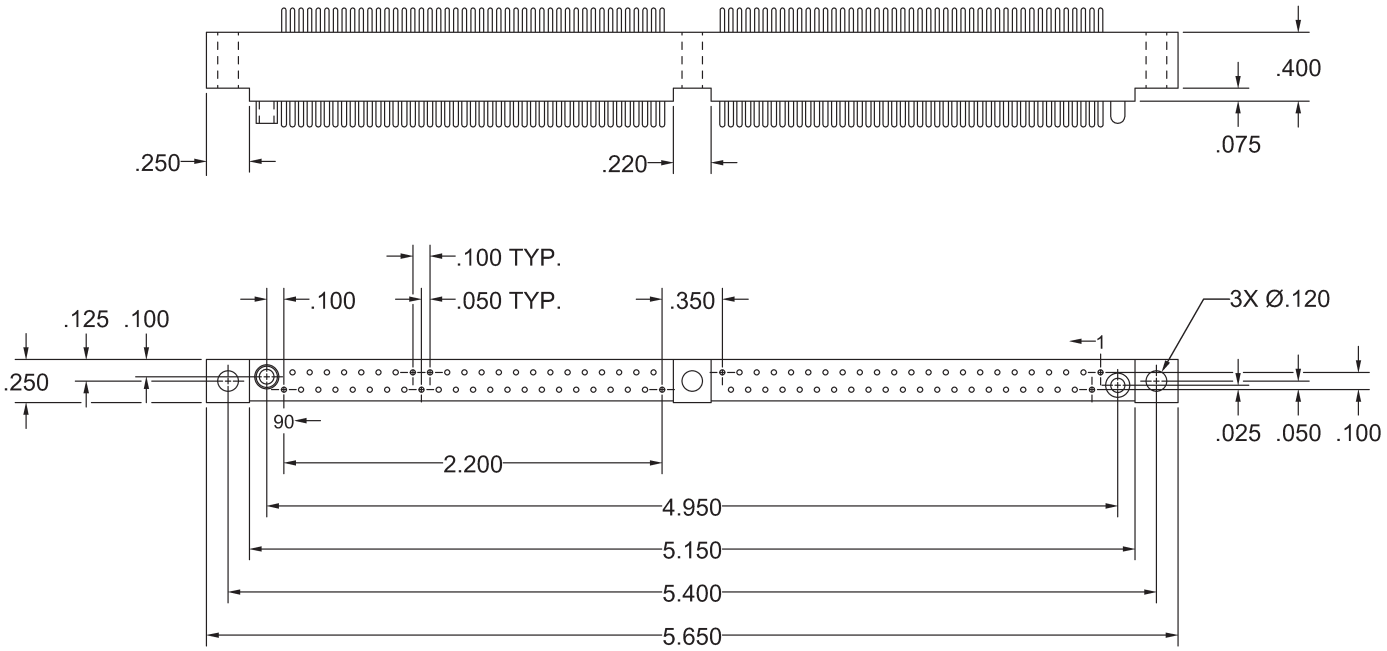

REFER TO APPENDIX FOR TERMINATION DETAILS, HARDWARE STYLES, POLARIZATION CHART, AND PWB PATTERNS

RECEPTACLE, STRAIGHT
STYLE HGM100 FBE, FDE, FSE, FWE

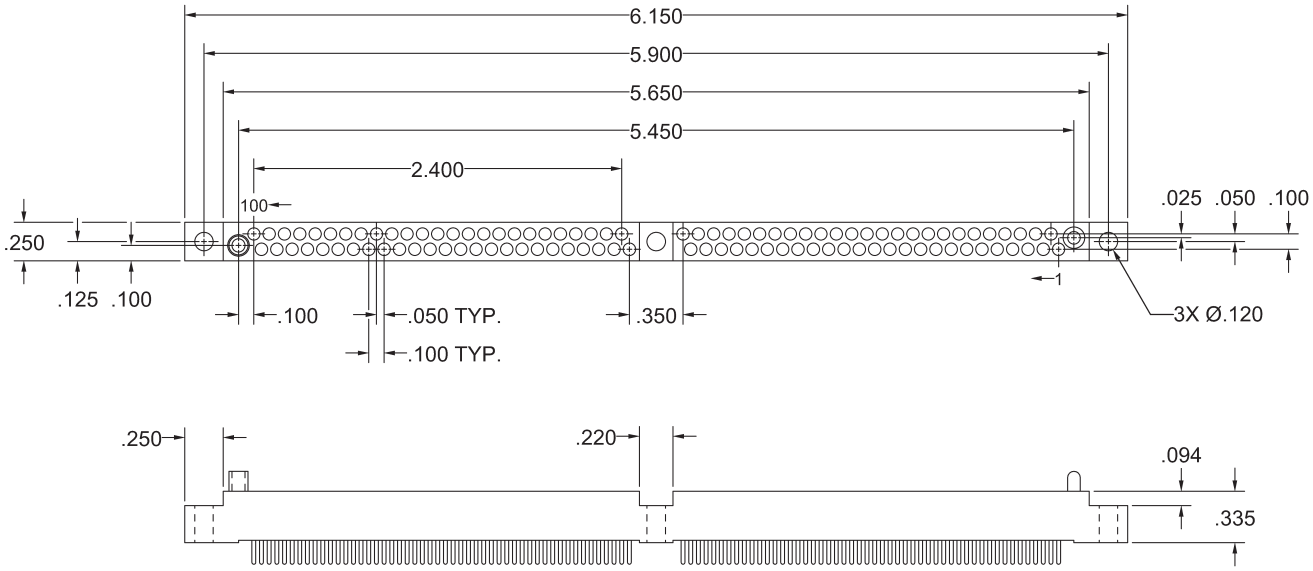

REFER TO APPENDIX FOR TERMINATION DETAILS, HARDWARE STYLES, POLARIZATION CHART, AND PWB PATTERNS

RECEPTACLE, RIGHT ANGLE
STYLE HGM100 FEE

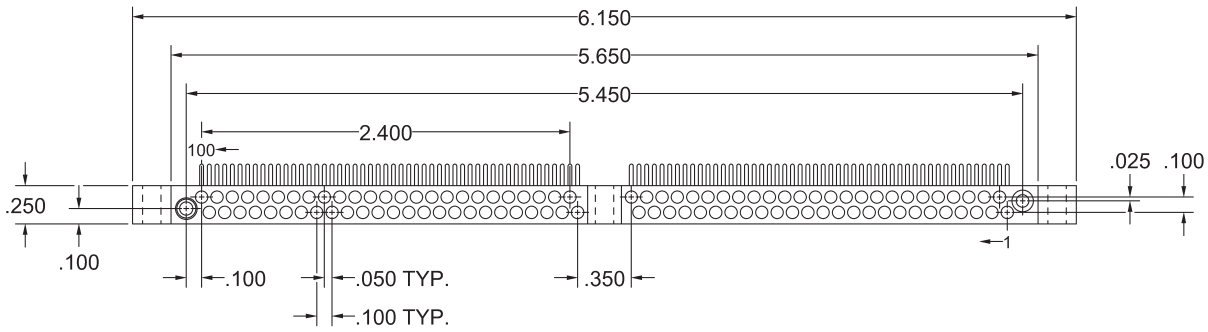

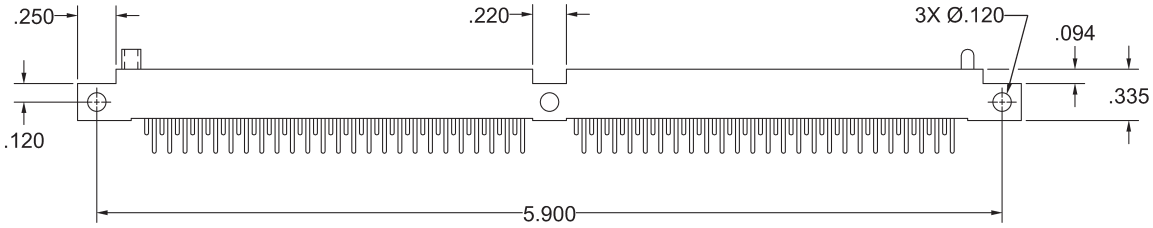

REFER TO APPENDIX FOR TERMINATION DETAILS, HARDWARE STYLES, POLARIZATION CHART, AND PWB PATTERNS

RECEPTACLE, SURFACE MOUNT
STYLE HGM100 FRE

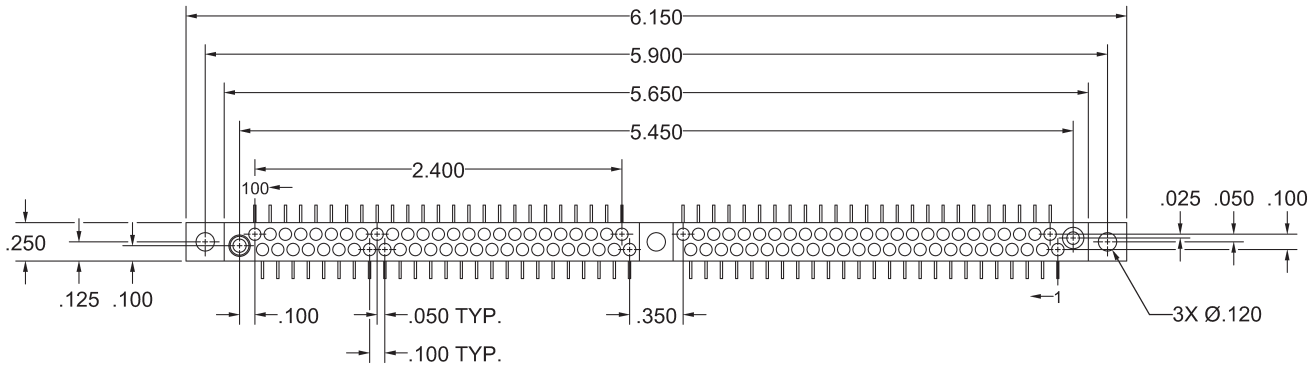

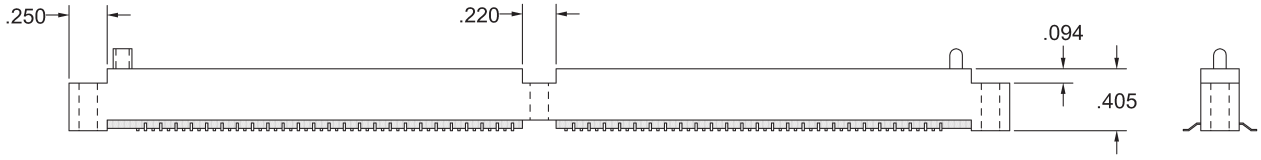

REFER TO APPENDIX FOR TERMINATION DETAILS, HARDWARE STYLES, POLARIZATION CHART, AND PWB PATTERNS

RECEPTACLE, COMPLIANT
STYLE HGM100 FVE

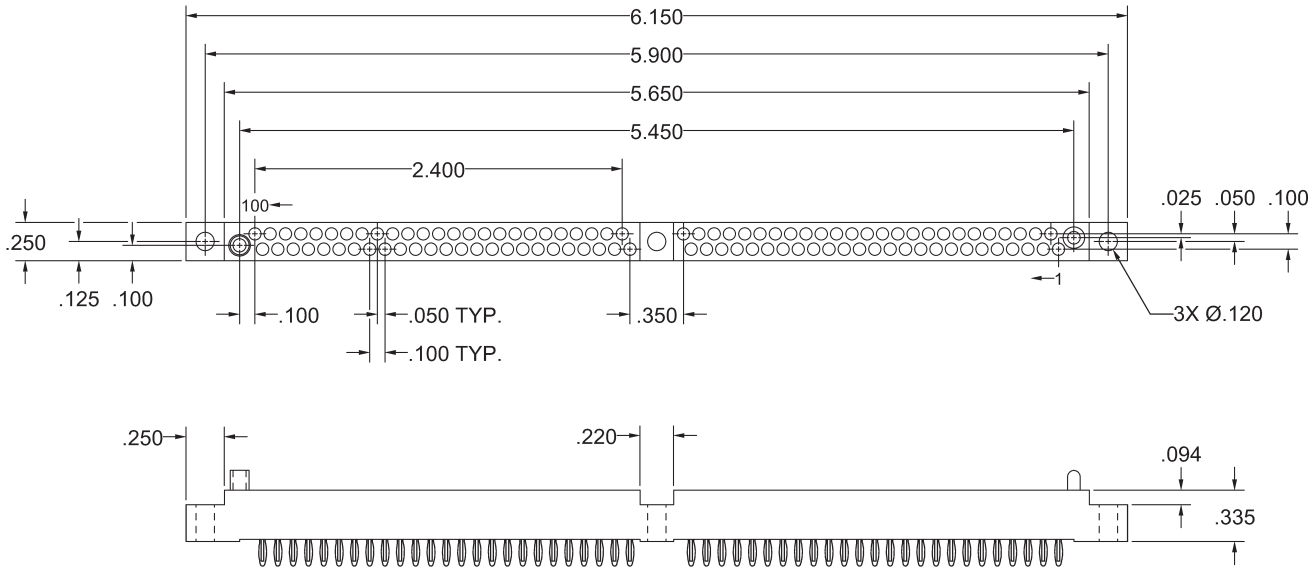

REFER TO APPENDIX FOR TERMINATION DETAILS, HARDWARE STYLES, POLARIZATION CHART, AND PWB PATTERNS

RECEPTACLE, PLUG PATTERN, STRAIGHT
STYLE HGM100 SBE, SDE, SSE, SWE

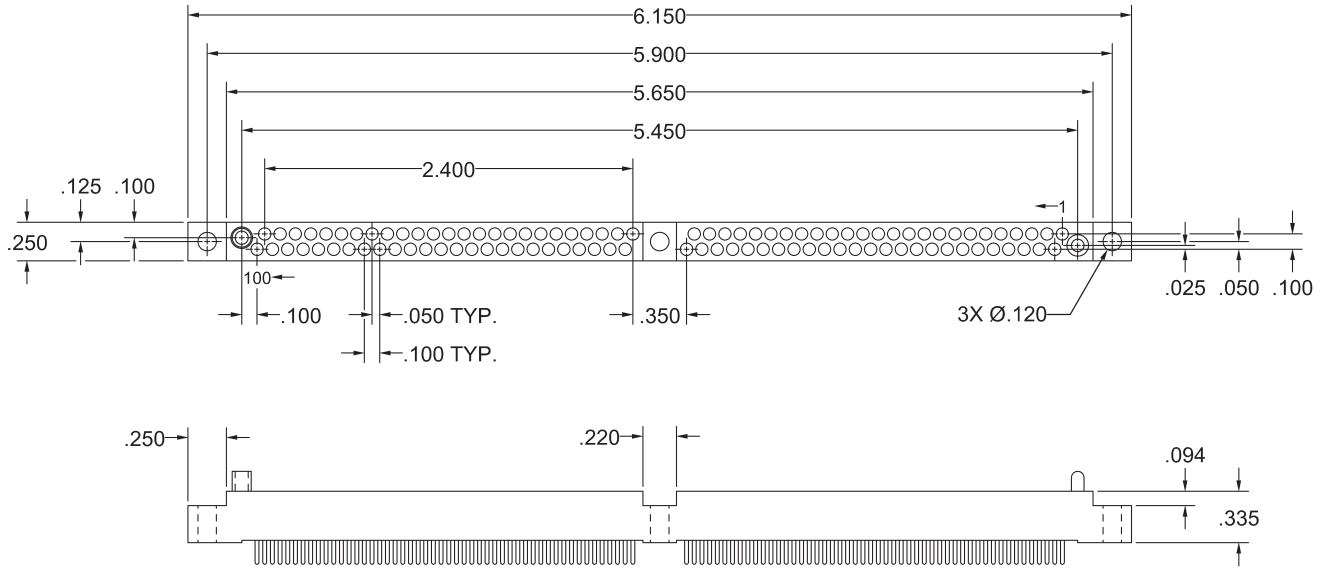

REFER TO APPENDIX FOR TERMINATION DETAILS, HARDWARE STYLES, POLARIZATION CHART, AND PWB PATTERNS

RECEPTACLE, PLUG PATTERN, COMPLIANT
STYLE HGM100 SVE

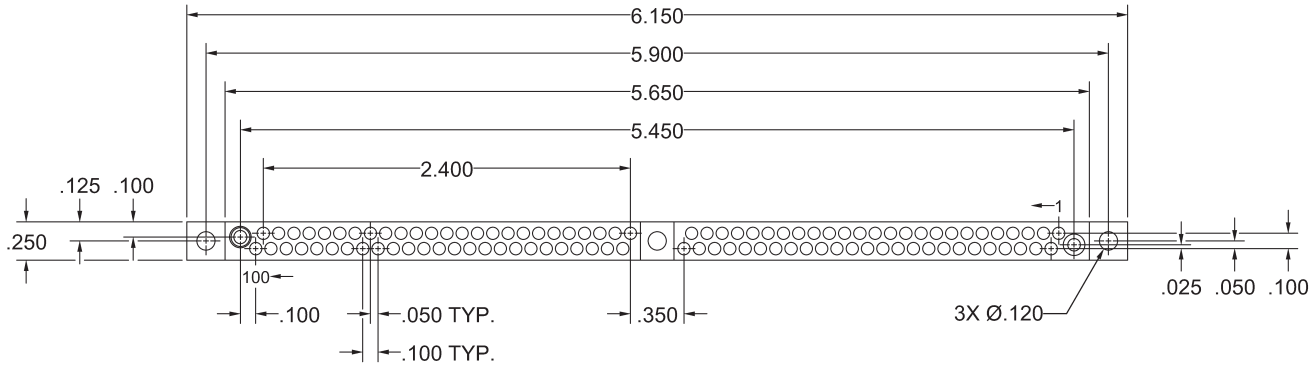

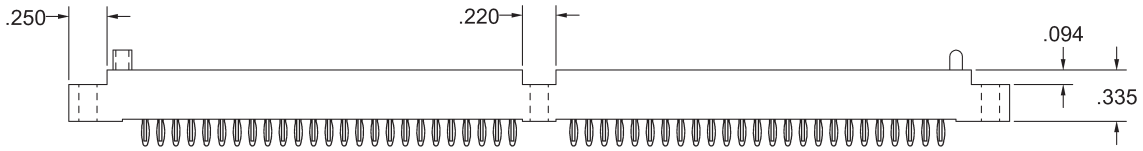

REFER TO APPENDIX FOR TERMINATION DETAILS, HARDWARE STYLES, POLARIZATION CHART, AND PWB PATTERNS

PLUG, RECEPTACLE PATTERN, STRAIGHT
STYLE HGM100 MBE, MDE, MSE, MWE

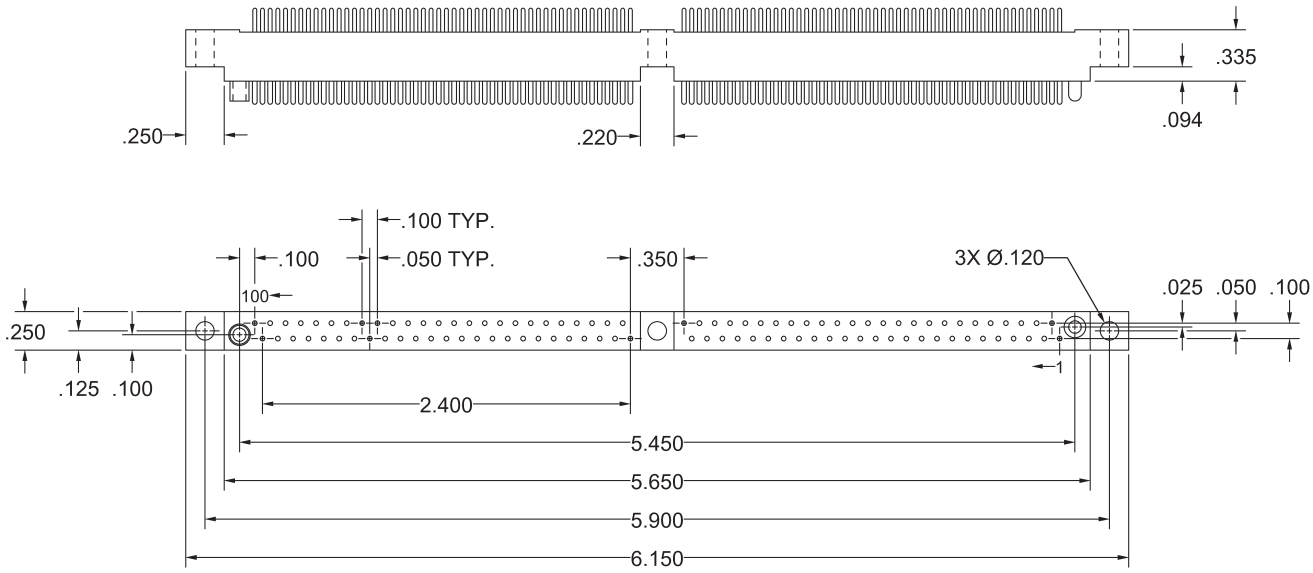

REFER TO APPENDIX FOR TERMINATION DETAILS, HARDWARE STYLES, POLARIZATION CHART, AND PWB PATTERNS

PLUG, RIGHT ANGLE
STYLE HGM100 MEE

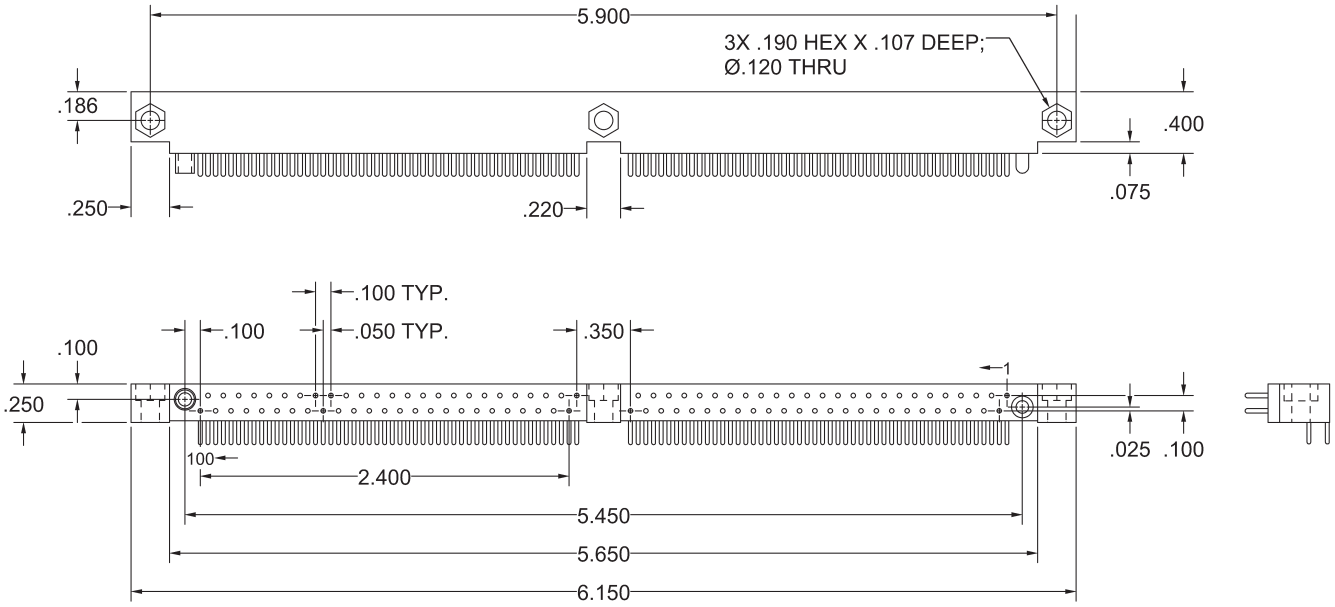

REFER TO APPENDIX FOR TERMINATION DETAILS, HARDWARE STYLES, POLARIZATION CHART, AND PWB PATTERNS

PLUG, STRAIGHT
STYLE HGM100 PBE, PDE, PSE, PWE

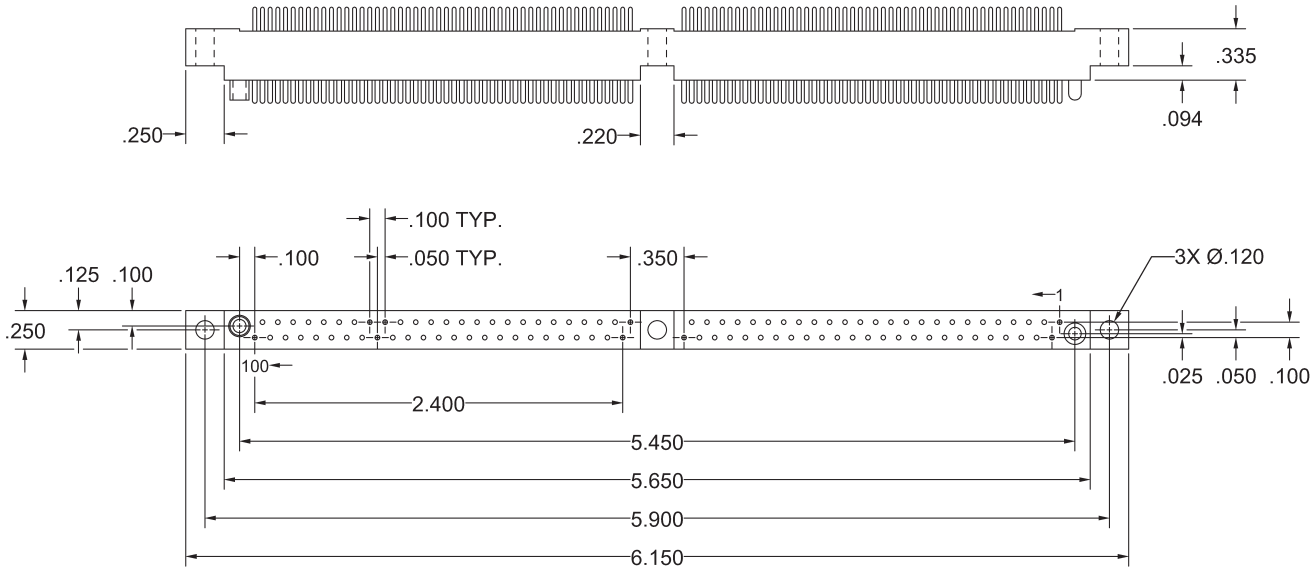

REFER TO APPENDIX FOR TERMINATION DETAILS, HARDWARE STYLES, POLARIZATION CHART, AND PWB PATTERNS

PLUG, COMPLIANT
STYLE HGM100 PVE

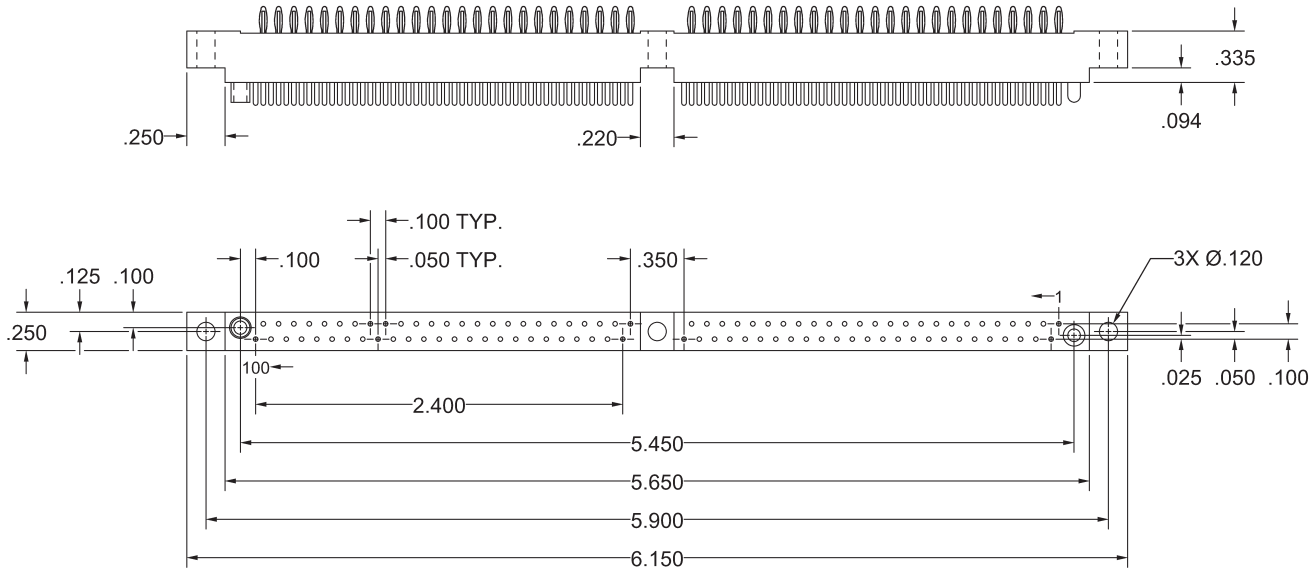

REFER TO APPENDIX FOR TERMINATION DETAILS, HARDWARE STYLES, POLARIZATION CHART, AND PWB PATTERNS

RECEPTACLE, STRAIGHT
STYLE HGM120 FBE,FDE,FSE,FWE

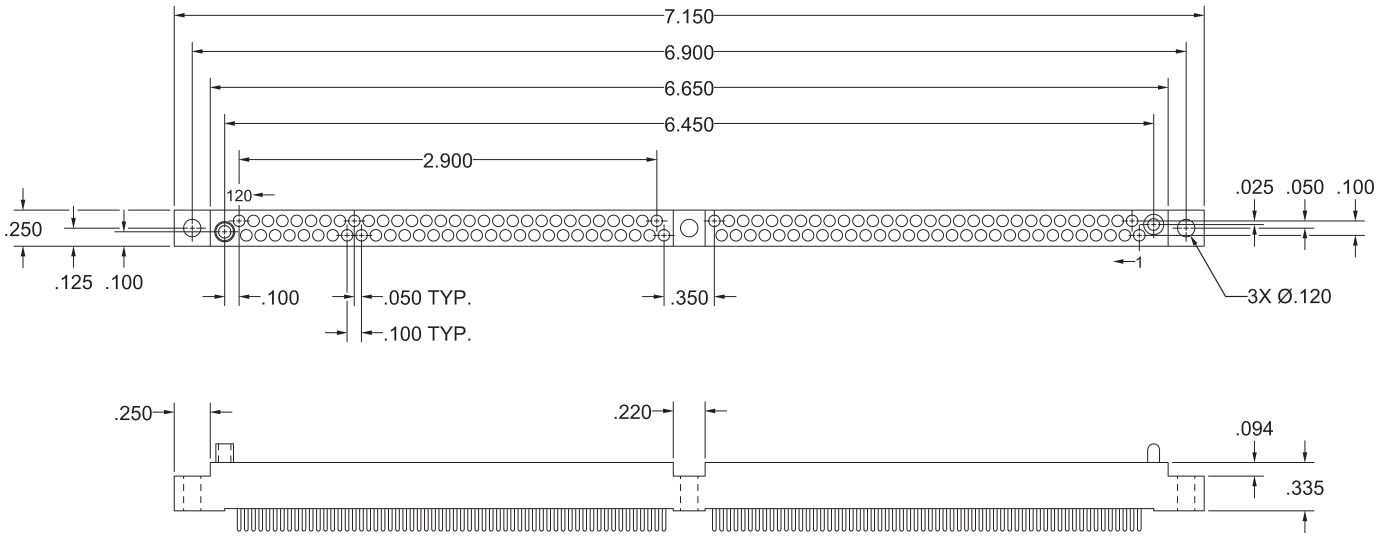

REFER TO APPENDIX FOR TERMINATION DETAILS, HARDWARE STYLES, POLARIZATION CHART, AND PWB PATTERNS

RECEPTACLE, RIGHT ANGLE
STYLE HGM120 FEE

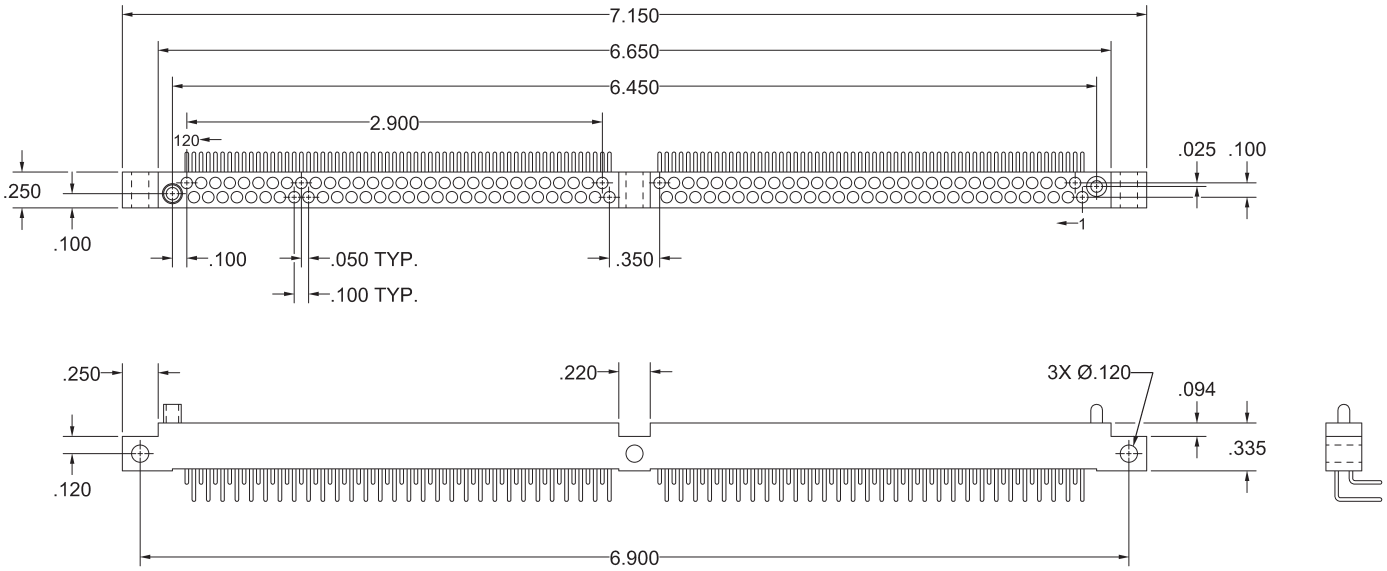

REFER TO APPENDIX FOR TERMINATION DETAILS, HARDWARE STYLES, POLARIZATION CHART, AND PWB PATTERNS

RECEPTACLE, SURFACE MOUNT
STYLE HGM120 FRE

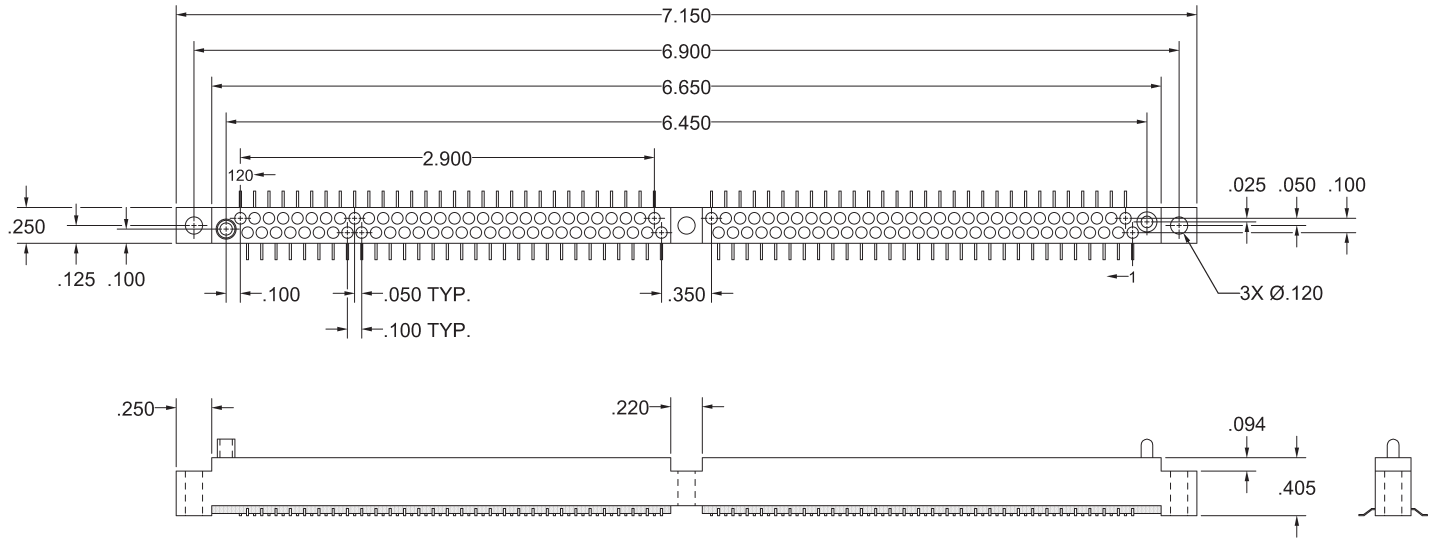

REFER TO APPENDIX FOR TERMINATION DETAILS, HARDWARE STYLES, POLARIZATION CHART, AND PWB PATTERNS

RECEPTACLE, COMPLIANT
STYLE HGM120 FVE

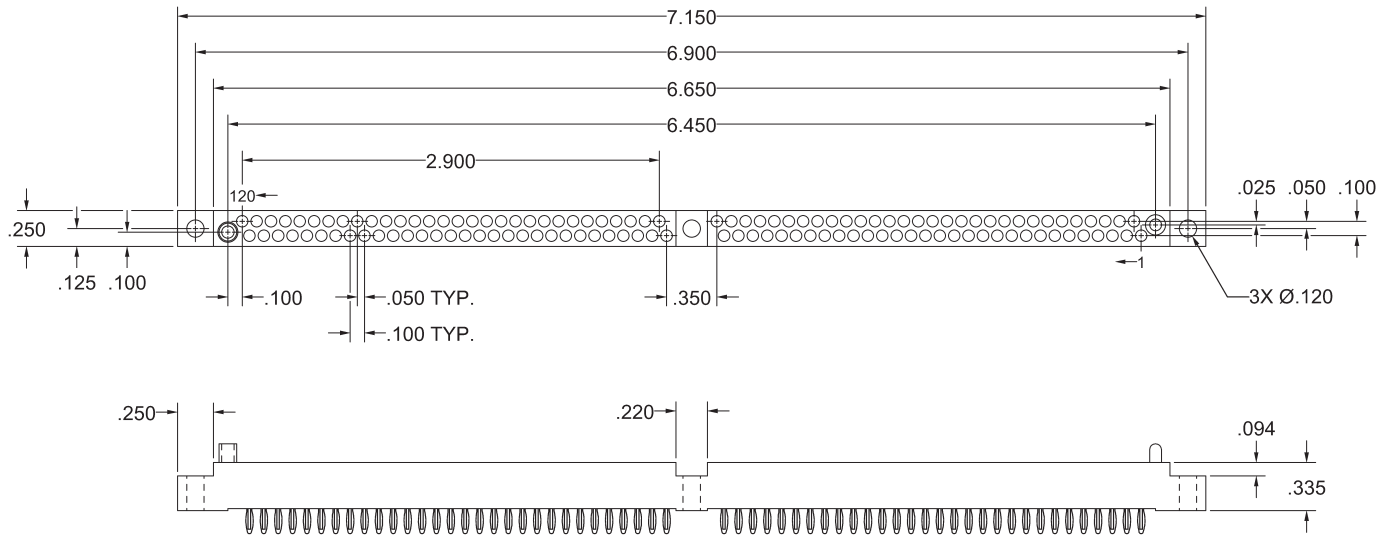

REFER TO APPENDIX FOR TERMINATION DETAILS, HARDWARE STYLES, POLARIZATION CHART, AND PWB PATTERNS

PLUG, RIGHT ANGLE
STYLE HGM120 MEE

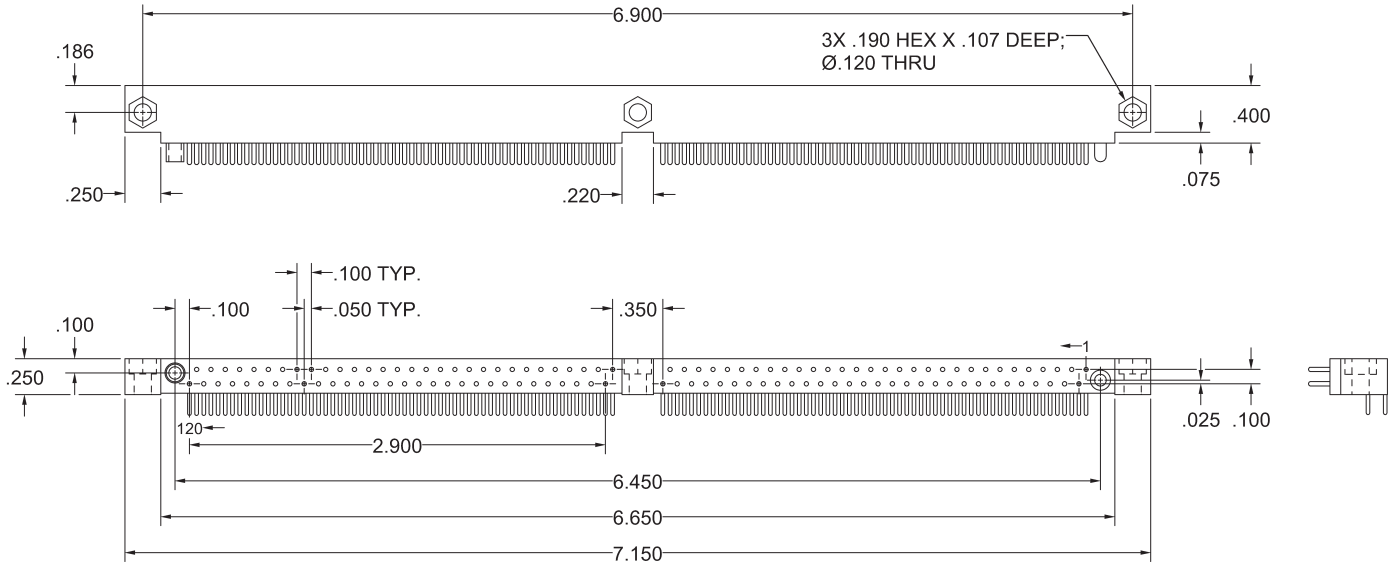

REFER TO APPENDIX FOR TERMINATION DETAILS, HARDWARE STYLES, POLARIZATION CHART, AND PWB PATTERNS

PLUG, STRAIGHT
STYLE HGM120 RBE, RDE, RSE, RWE

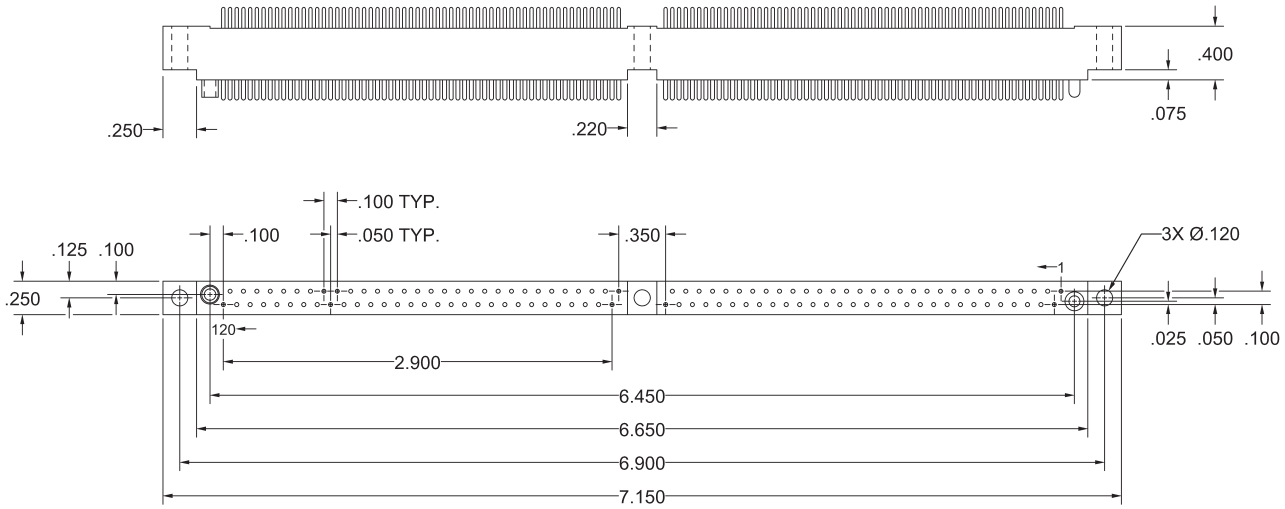

REFER TO APPENDIX FOR TERMINATION DETAILS, HARDWARE STYLES, POLARIZATION CHART, AND PWB PATTERNS

ORDERING CHART
3-ROW

HGM	050	F	D	E	1	X	99	E	300

Series

Contact Capacity
(Use All 3 Places)

Contact Gender	
F	Socket Low Profile (.335)
M	Pin High Profile (.400)[1]
M	Pin Low Profile (.335)[2]

Termination Style	
A	Stacking
B	Flex Cable
D	Dip Solder Straight
E	Dip Solder Right Angle
L	Compliant Right Angle
S	Solder Cup
V	Compliant
W	Wire Wrap
X	Solder Cup Right Angle
Contact Factory - Not Available In Every Configuration	

Insulator	
A	Diallyl Phthalate (Green) - Not For New Designs
E	Polyphenylene Sulfide (Ryton-Brown)

Termination Length - "L"			
Code	Dip Solder	Wire Wrap	Flex
1	.109	.375	.050
2	.140	.500	.098
3	.172	.625	-
4	.234	-	-
9	User Defined		
0	Use For Solder Cup & Compliant Without Extension		
A	Use For Compliant With Stacking Extension		

Variation Code - Factory Assigned	
Not Required When MIL-C-55302 Ordered	
320	Solder Dip Terminals
3C0	Epoxy Termination Sealed
3C2	Epoxy Sealed & Solder Dipped

Mounting Style	
A	Thru Hole Mtg.
B	Thru Hole Insert
C	Threaded Insert
D	Remove Mtg. Ears
E	Stud/Threaded

Hardware Arrangement	
00*	Assembled as "01" without Loctite
01 - 64*	Y - "D" Shaped Guides (Loctite)
65 - 68	Universal
69	IEH Standard Loctite Applied
70 - 72	See Appendix
97	2 Pin Guides Unassembled
98	2 Socket Guides Unassembled
99	1 Pin & Socket Unassembled
*Use with MIL-C-55302 Callout	

Hardware Style	
A	Round Guides w/ Mtg. Stud
B	"D" Shaped Guides w/ Mtg. Stud (Polarizing)
H	Short Rotating (Int. Hex)
K	Fixed Locking
L	Long Rotating (Slotted)
M	Med. Rotating (Slotted)
P	Rotating (Hex)
S	Short Rotating (Slotted)
T	Fixed Locking w/ Mtg. Stud
X	Round Guides
Y	"D" Shaped Guides (Polarizing)
0	No Hardware Supplied

Notes:
1. For Termination Style E, X, L.
2. For Termination Style A, B, D, S, V, W

RECEPTACLE, STACKING
STYLE FAE9, FVEA

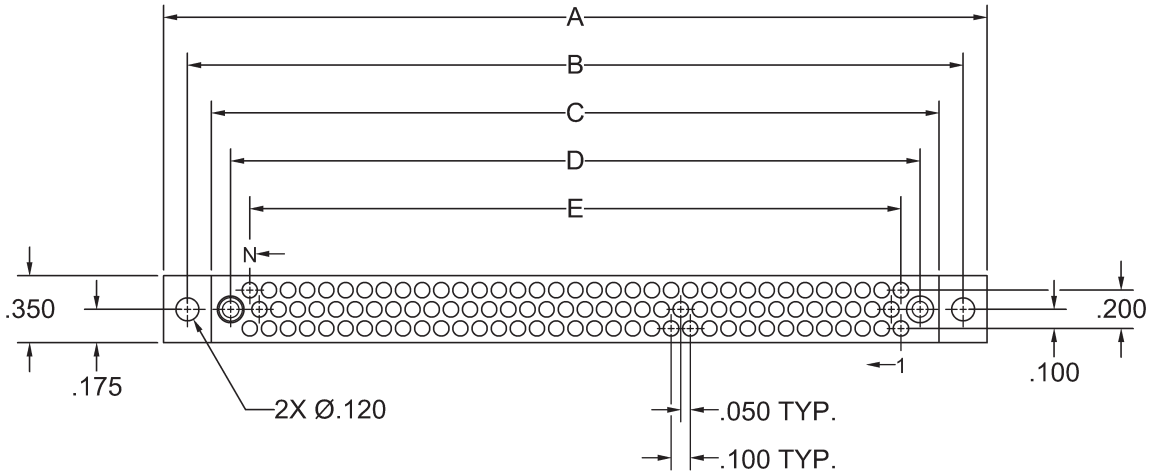

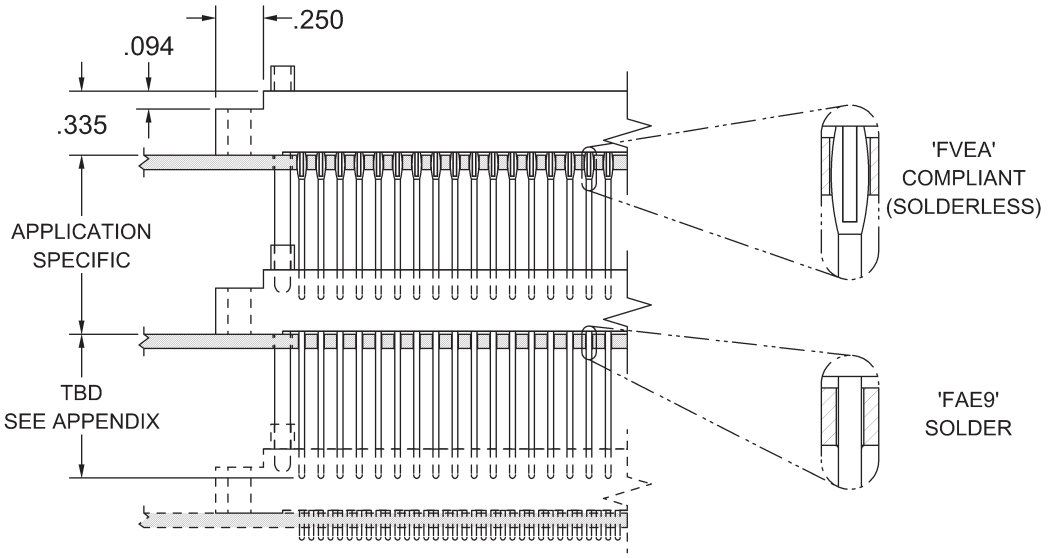

'N' Contacts	A	B	C	D	E
050	2.500	2.250	2.000	1.800	1.600
062	2.900	2.650	2.400	2.200	2.000
080	3.500	3.250	3.000	2.800	2.600
092	3.900	3.650	3.400	3.200	3.000
104	4.300	4.050	3.800	3.600	3.400

REFER TO APPENDIX FOR TERMINATION DETAILS, HARDWARE STYLES, POLARIZATION CHART, AND PWB PATTERNS

RECEPTACLE, STRAIGHT
STYLE FBE, FDE, FSE, FWE

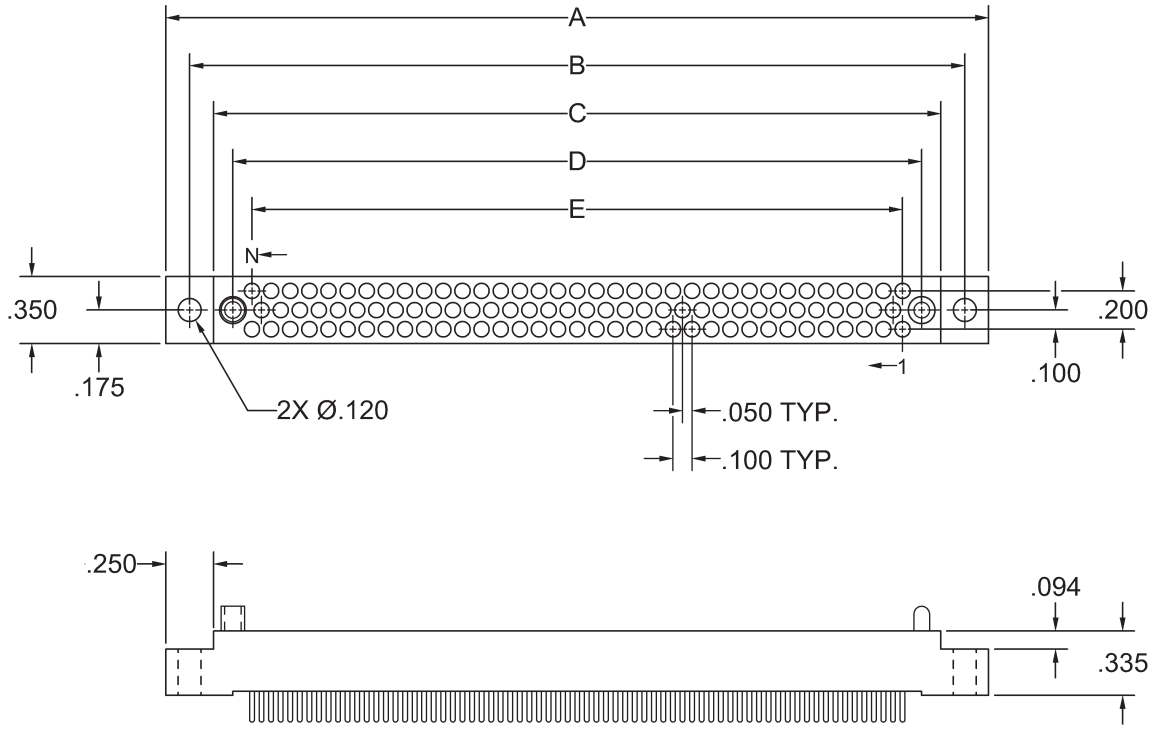

'N' Contacts	A	B	C	D	E
050	2.500	2.250	2.000	1.800	1.600
062	2.900	2.650	2.400	2.200	2.000
080	3.500	3.250	3.000	2.800	2.600
092	3.900	3.650	3.400	3.200	3.000
104	4.300	4.050	3.800	3.600	3.400

REFER TO APPENDIX FOR TERMINATION DETAILS, HARDWARE STYLES, POLARIZATION CHART, AND PWB PATTERNS

RECEPTACLE, RIGHT ANGLE
STYLE FEE

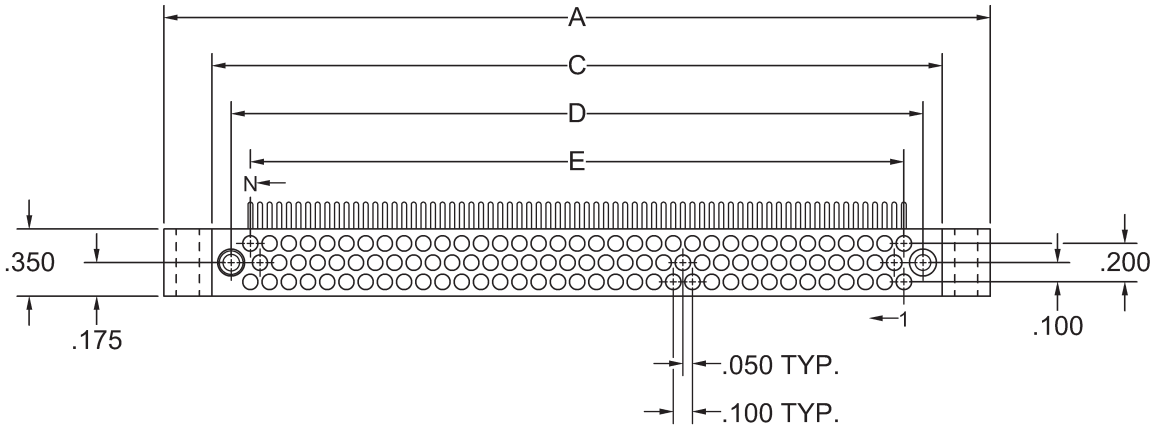

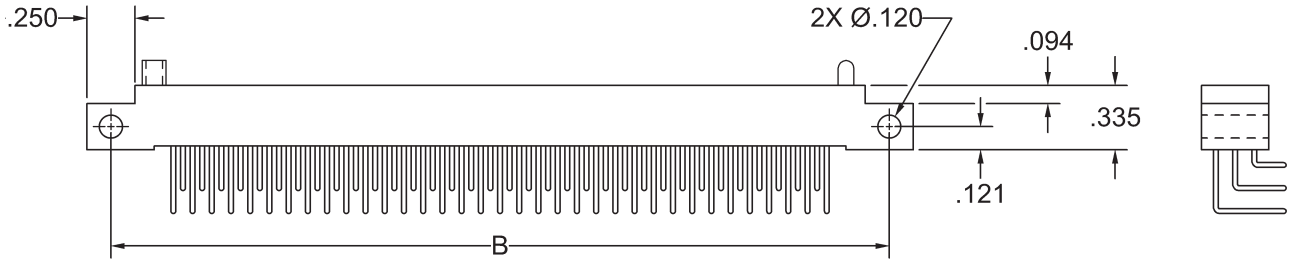

'N' Contacts	A	B	C	D	E
050	2.500	2.250	2.000	1.800	1.600
062	2.900	2.650	2.400	2.200	2.000
080	3.500	3.250	3.000	2.800	2.600
092	3.900	3.650	3.400	3.200	3.000
104	4.300	4.050	3.800	3.600	3.400

REFER TO APPENDIX FOR TERMINATION DETAILS, HARDWARE STYLES, POLARIZATION CHART, AND PWB PATTERNS

RECEPTACLE, COMPLIANT
STYLE FVE

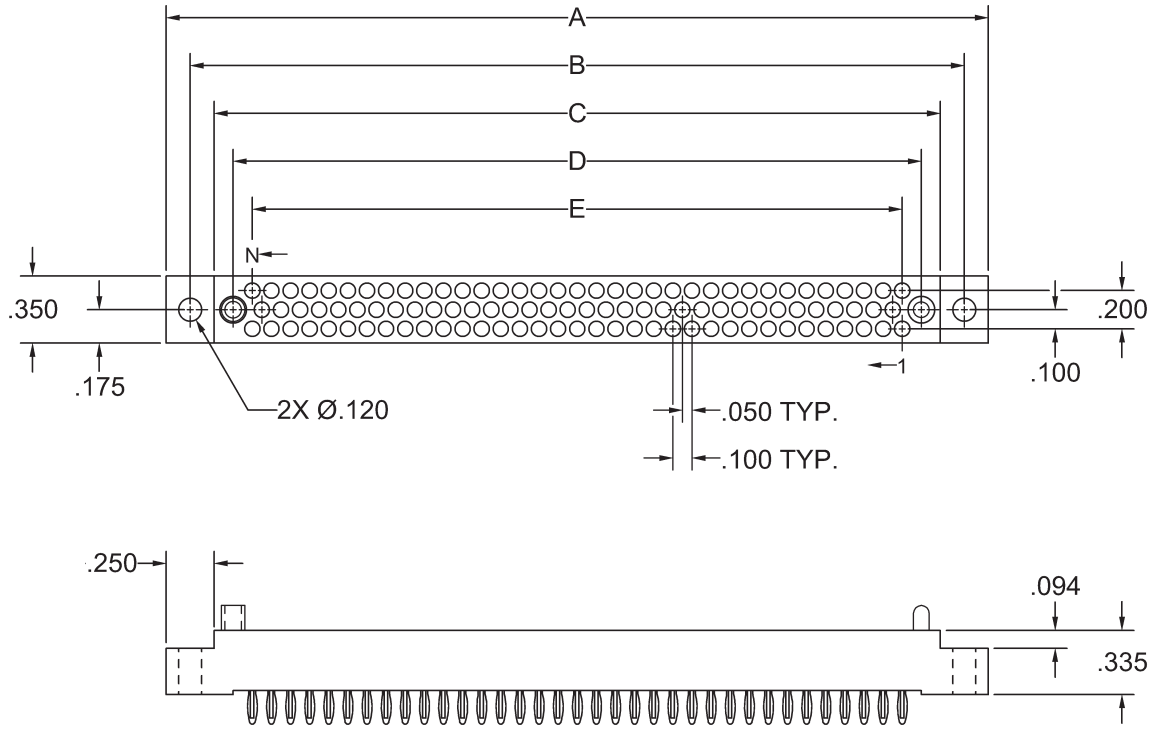

'N' Contacts	A	B	C	D	E
050	2.500	2.250	2.000	1.800	1.600
062	2.900	2.650	2.400	2.200	2.000
080	3.500	3.250	3.000	2.800	2.600
092	3.900	3.650	3.400	3.200	3.000
104	4.300	4.050	3.800	3.600	3.400

REFER TO APPENDIX FOR TERMINATION DETAILS, HARDWARE STYLES, POLARIZATION CHART, AND PWB PATTERNS

PLUG, STACKING
STYLE MAE9, MVEA

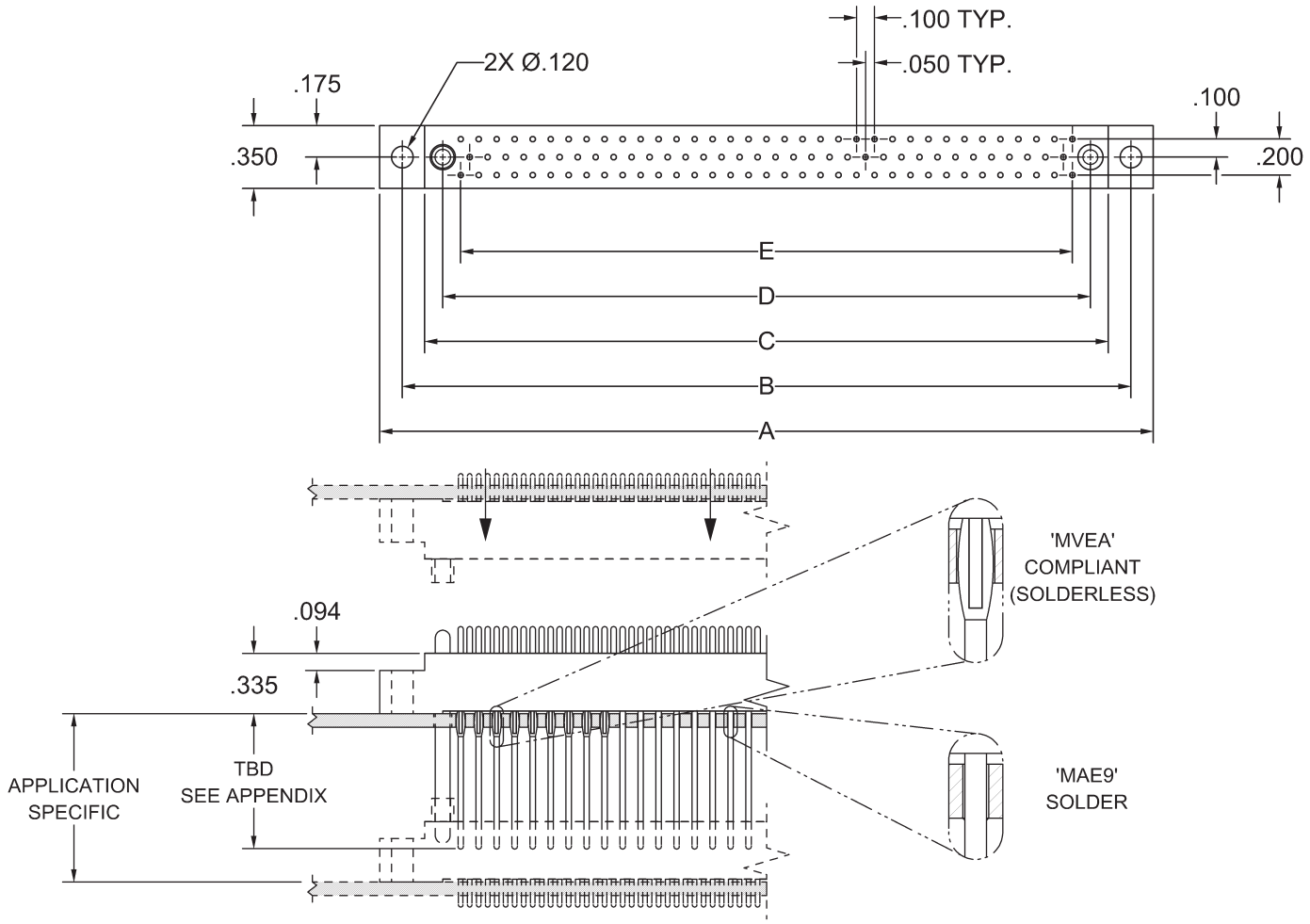

'N' Contacts	A	B	C	D	E
050	2.500	2.250	2.000	1.800	1.600
062	2.900	2.650	2.400	2.200	2.000
080	3.500	3.250	3.000	2.800	2.600
092	3.900	3.650	3.400	3.200	3.000
104	4.300	4.050	3.800	3.600	3.400

REFER TO APPENDIX FOR TERMINATION DETAILS, HARDWARE STYLES, POLARIZATION CHART, AND PWB PATTERNS

PLUG, STRAIGHT
STYLE MBE, MDE, MSE, MWE

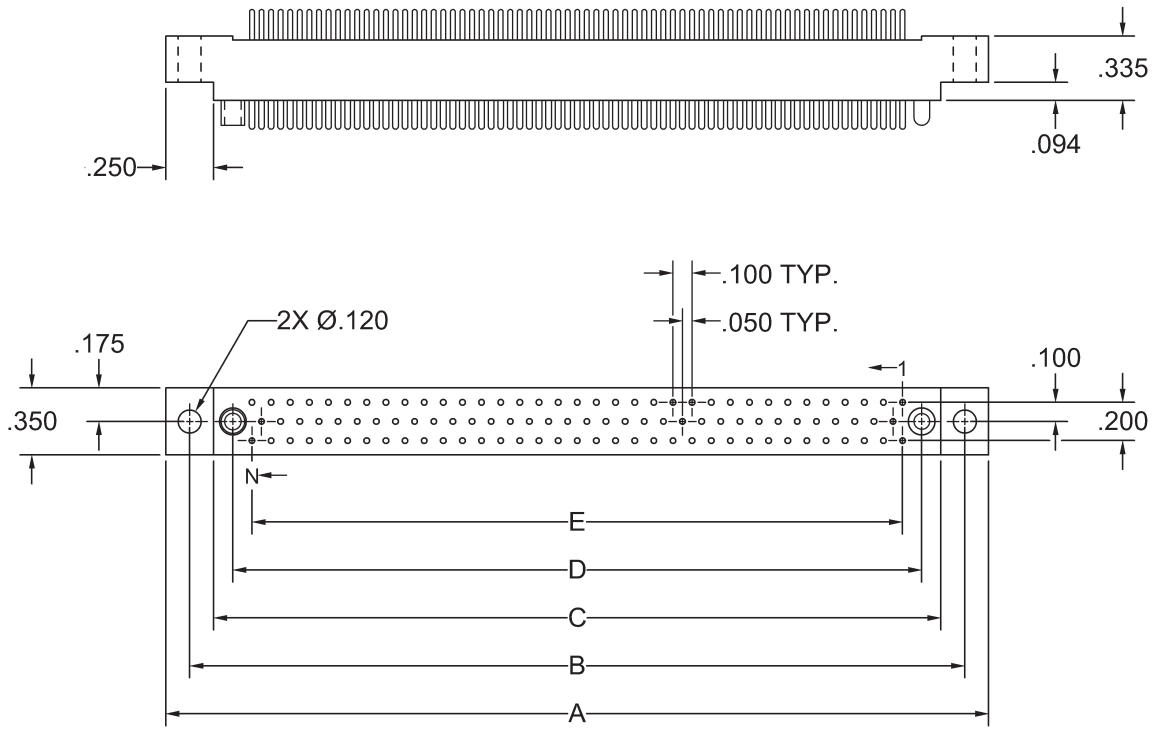

'N' Contacts	A	B	C	D	E
050	2.500	2.250	2.000	1.800	1.600
062	2.900	2.650	2.400	2.200	2.000
080	3.500	3.250	3.000	2.800	2.600
092	3.900	3.650	3.400	3.200	3.000
104	4.300	4.050	3.800	3.600	3.400

REFER TO APPENDIX FOR TERMINATION DETAILS, HARDWARE STYLES, POLARIZATION CHART, AND PWB PATTERNS

PLUG, RIGHT ANGLE
STYLE MEE, MLE, MXE

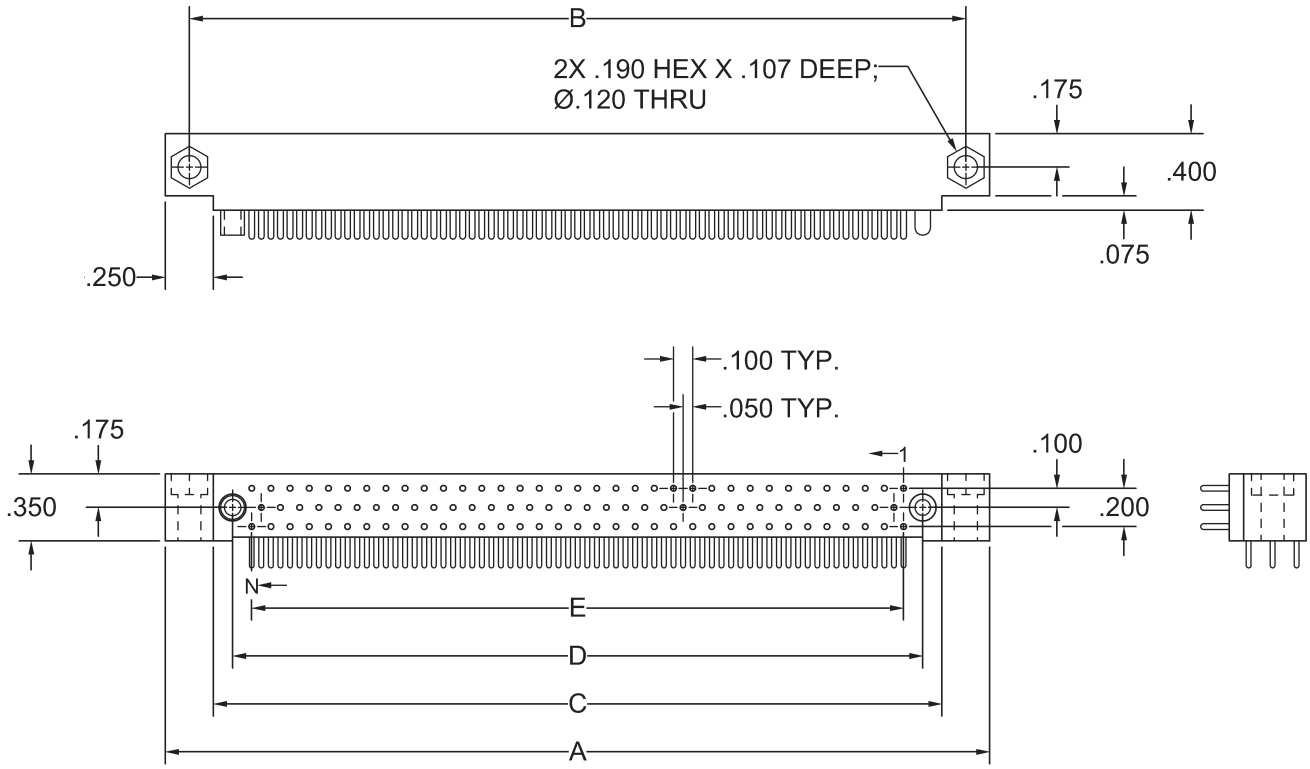

'N' Contacts	A	B	C	D	E
050	2.500	2.250	2.000	1.800	1.600
062	2.900	2.650	2.400	2.200	2.000
080	3.500	3.250	3.000	2.800	2.600
092	3.900	3.650	3.400	3.200	3.000
104	4.300	4.050	3.800	3.600	3.400

REFER TO APPENDIX FOR TERMINATION DETAILS, HARDWARE STYLES, POLARIZATION CHART, AND PWB PATTERNS

PLUG, COMPLIANT
STYLE MVE

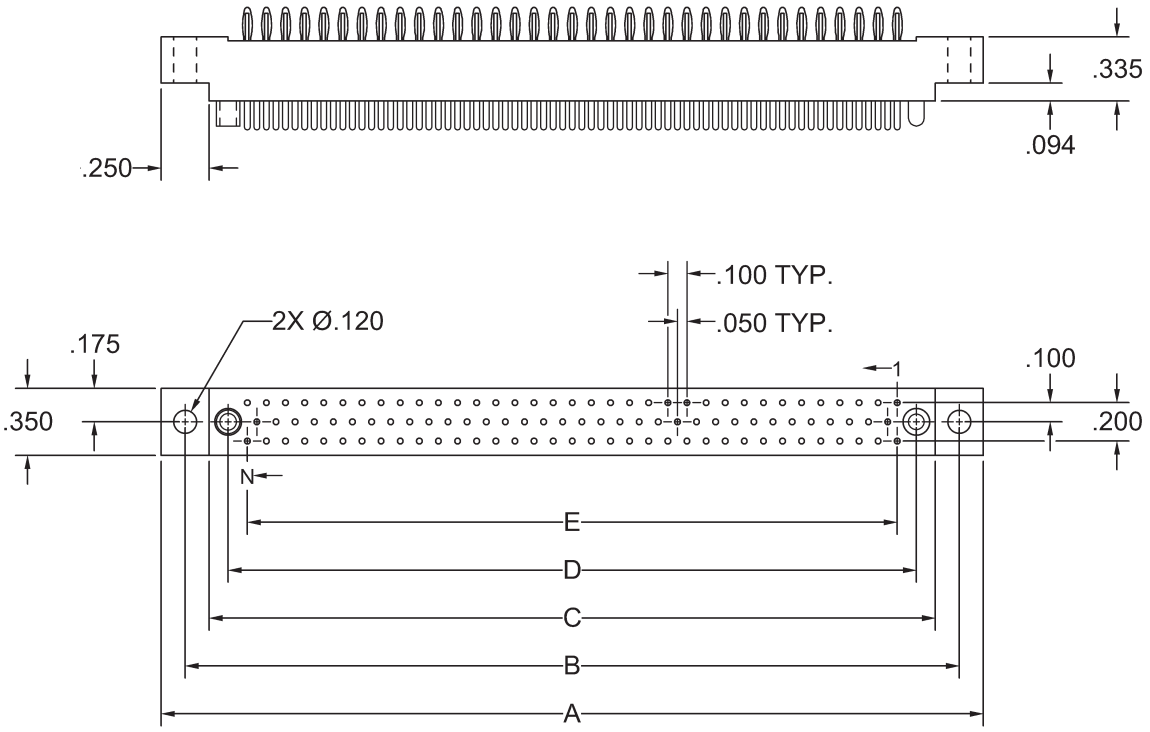

'N' Contacts	A	B	C	D	E
050	2.500	2.250	2.000	1.800	1.600
062	2.900	2.650	2.400	2.200	2.000
080	3.500	3.250	3.000	2.800	2.600
092	3.900	3.650	3.400	3.200	3.000
104	4.300	4.050	3.800	3.600	3.400

REFER TO APPENDIX FOR TERMINATION DETAILS, HARDWARE STYLES, POLARIZATION CHART, AND PWB PATTERNS

RECEPTACLE, STACKING
STYLE HGM122 FAE9, FVEA

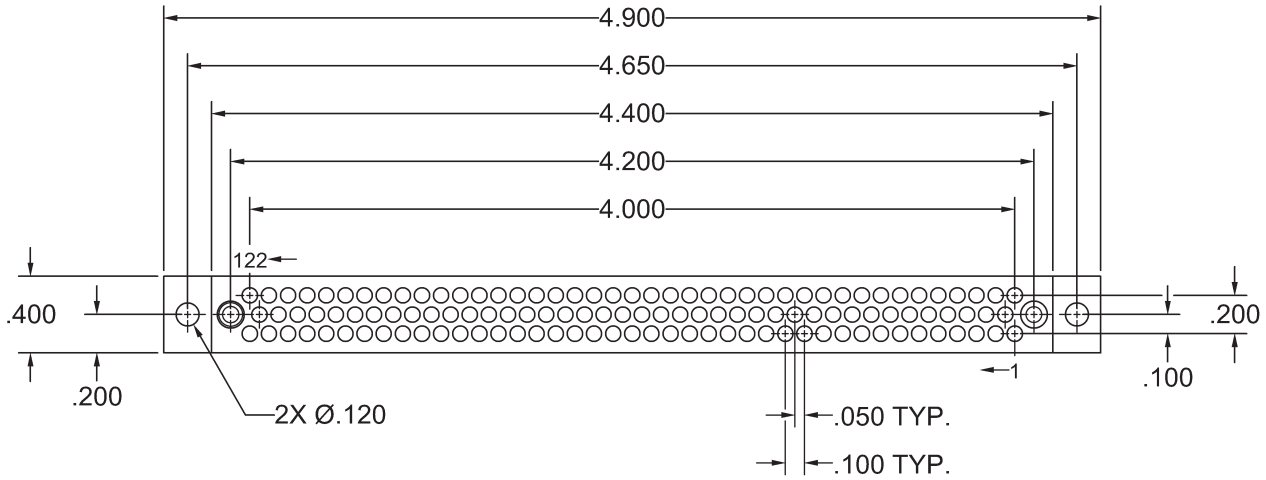

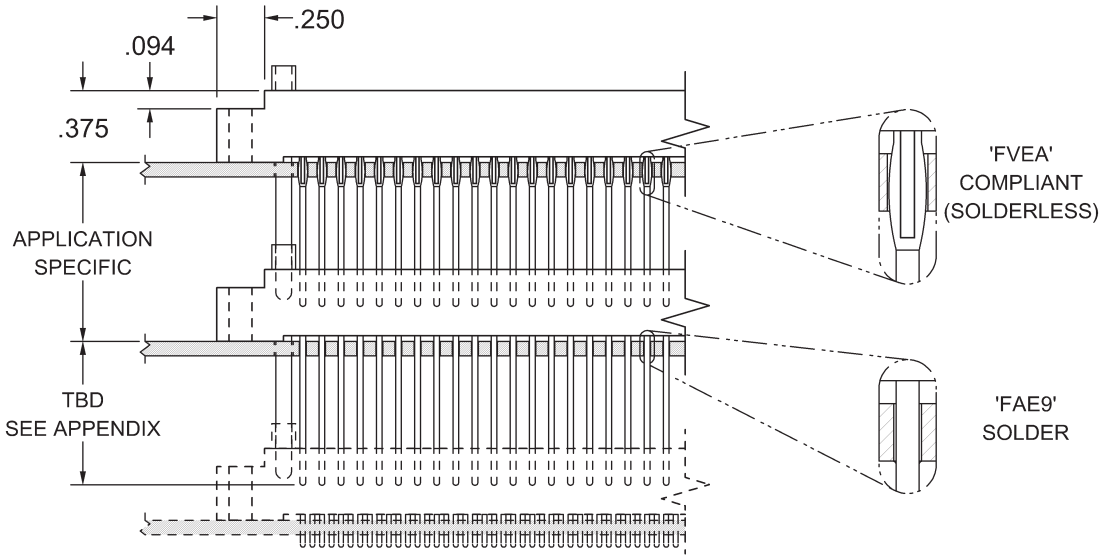

REFER TO APPENDIX FOR TERMINATION DETAILS, HARDWARE STYLES, POLARIZATION CHART, AND PWB PATTERNS

RECEPTACLE, STRAIGHT
STYLE HGM122 FBE, FDE, FSE, FWE

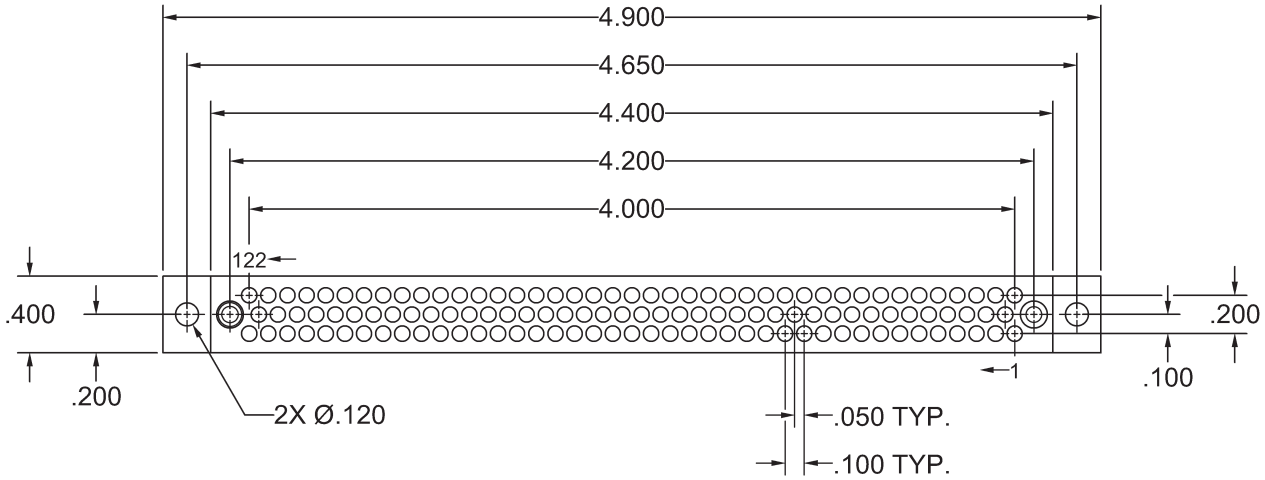

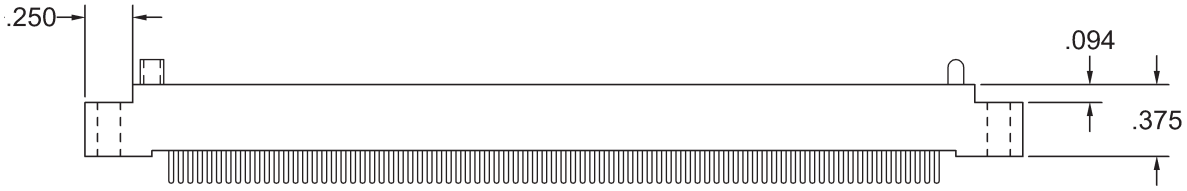

REFER TO APPENDIX FOR TERMINATION DETAILS, HARDWARE STYLES, POLARIZATION CHART, AND PWB PATTERNS

RECEPTACLE, RIGHT ANGLE
STYLE HGM122 FEE

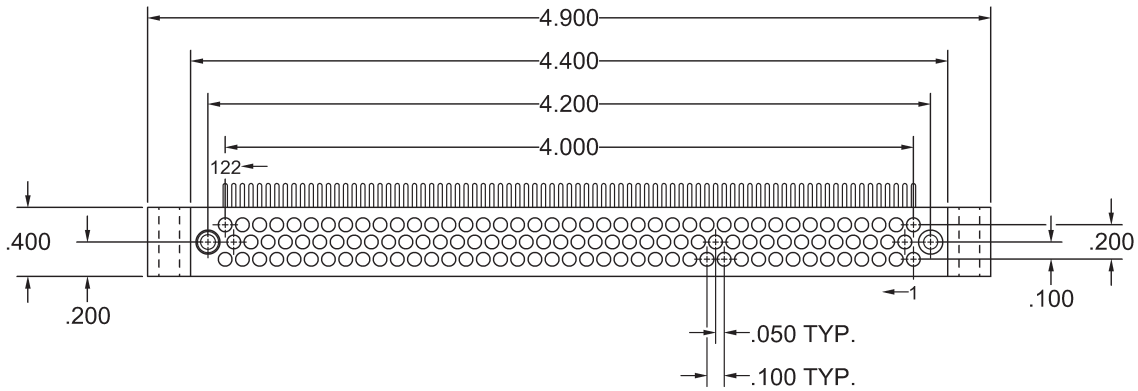

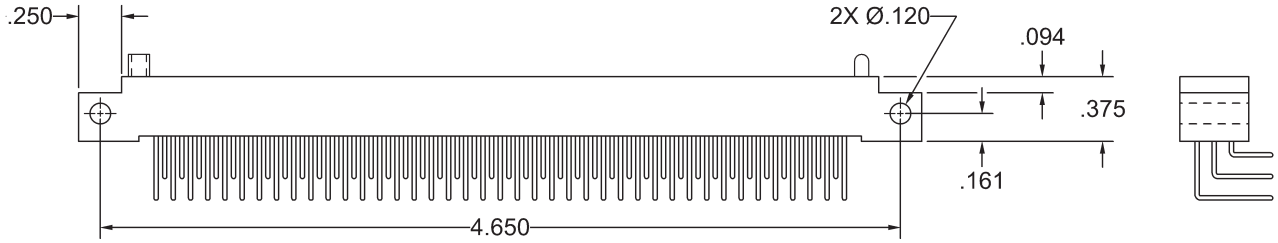

REFER TO APPENDIX FOR TERMINATION DETAILS, HARDWARE STYLES, POLARIZATION CHART, AND PWB PATTERNS

RECEPTACLE, COMPLIANT
STYLE HGM122 FVE

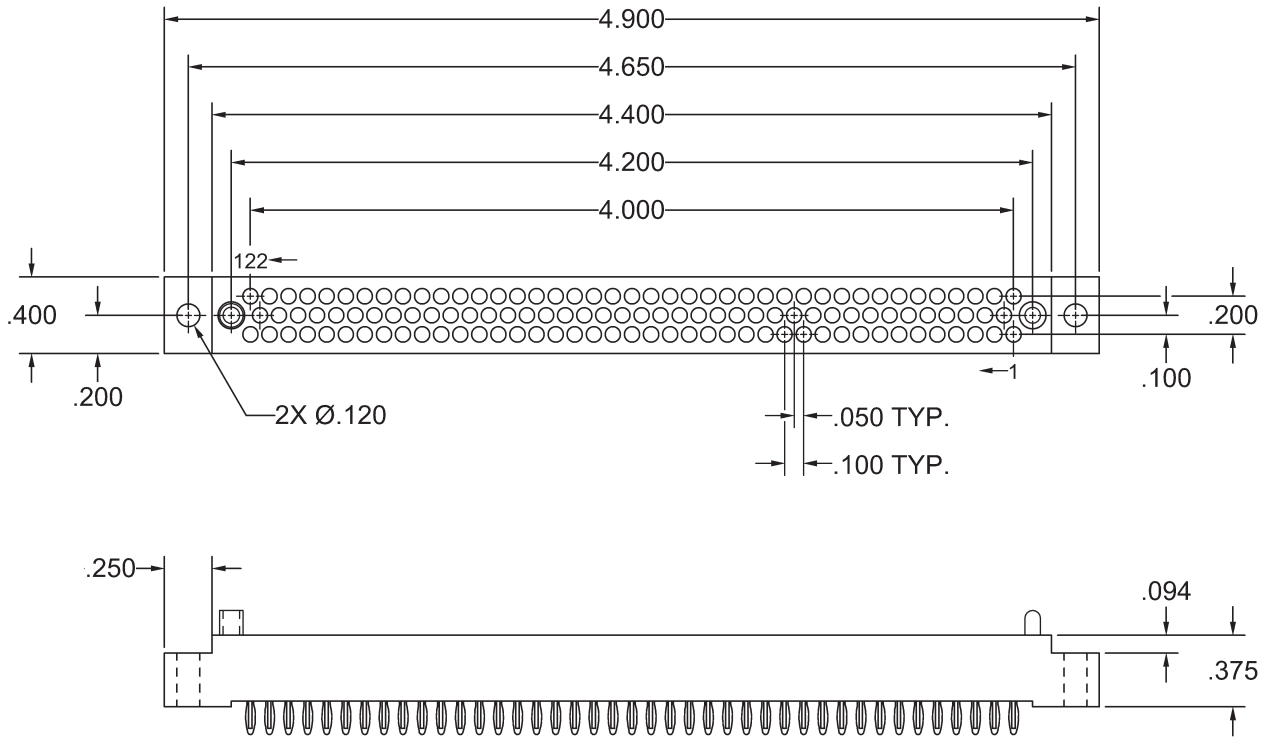

REFER TO APPENDIX FOR TERMINATION DETAILS, HARDWARE STYLES, POLARIZATION CHART, AND PWB PATTERNS

PLUG, STACKING
STYLE HGM122 MAE9, MVEA

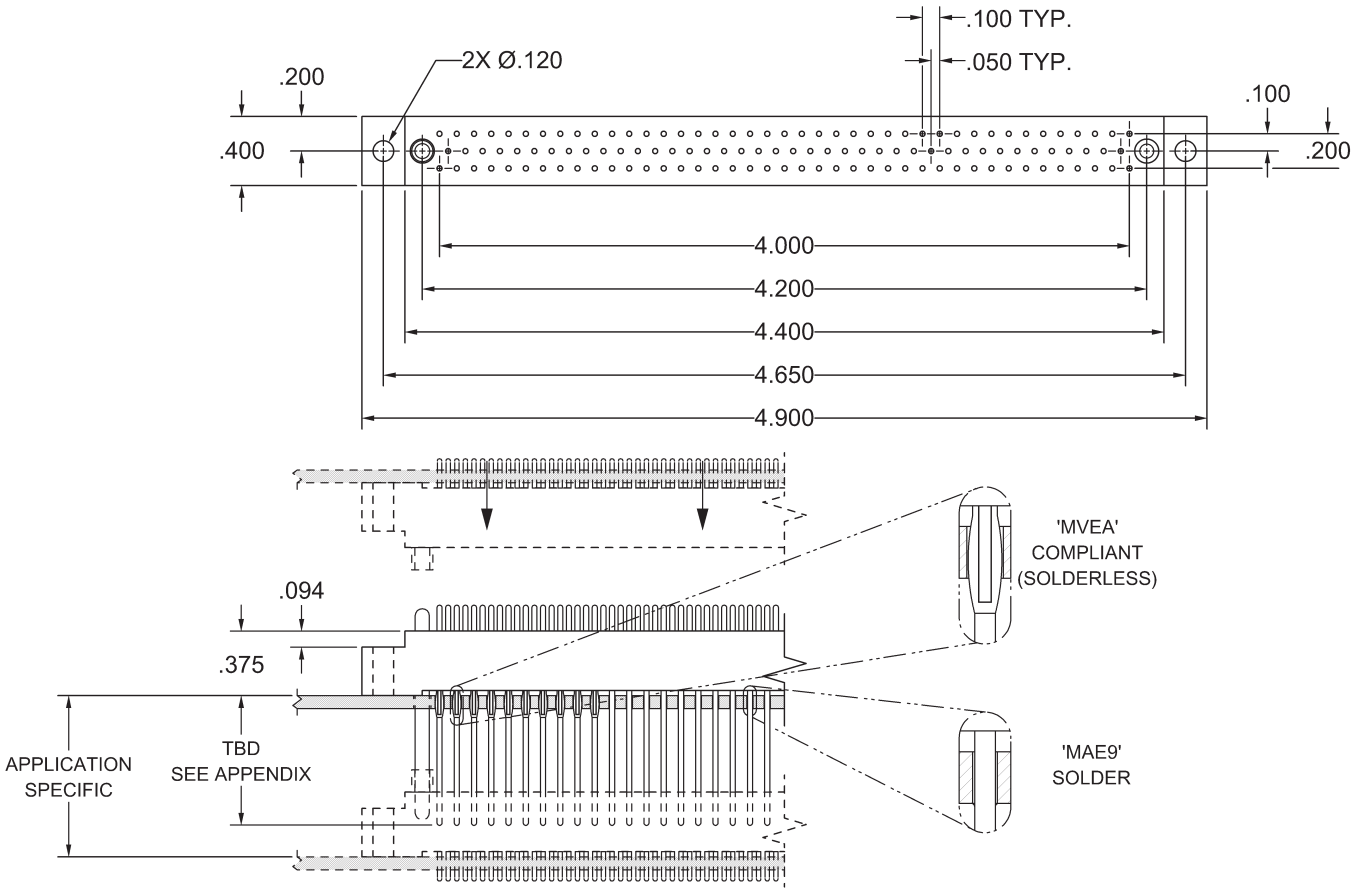

REFER TO APPENDIX FOR TERMINATION DETAILS, HARDWARE STYLES, POLARIZATION CHART, AND PWB PATTERNS

PLUG, STRAIGHT
STYLE HGM122 MBE, MDE, MSE, MWE

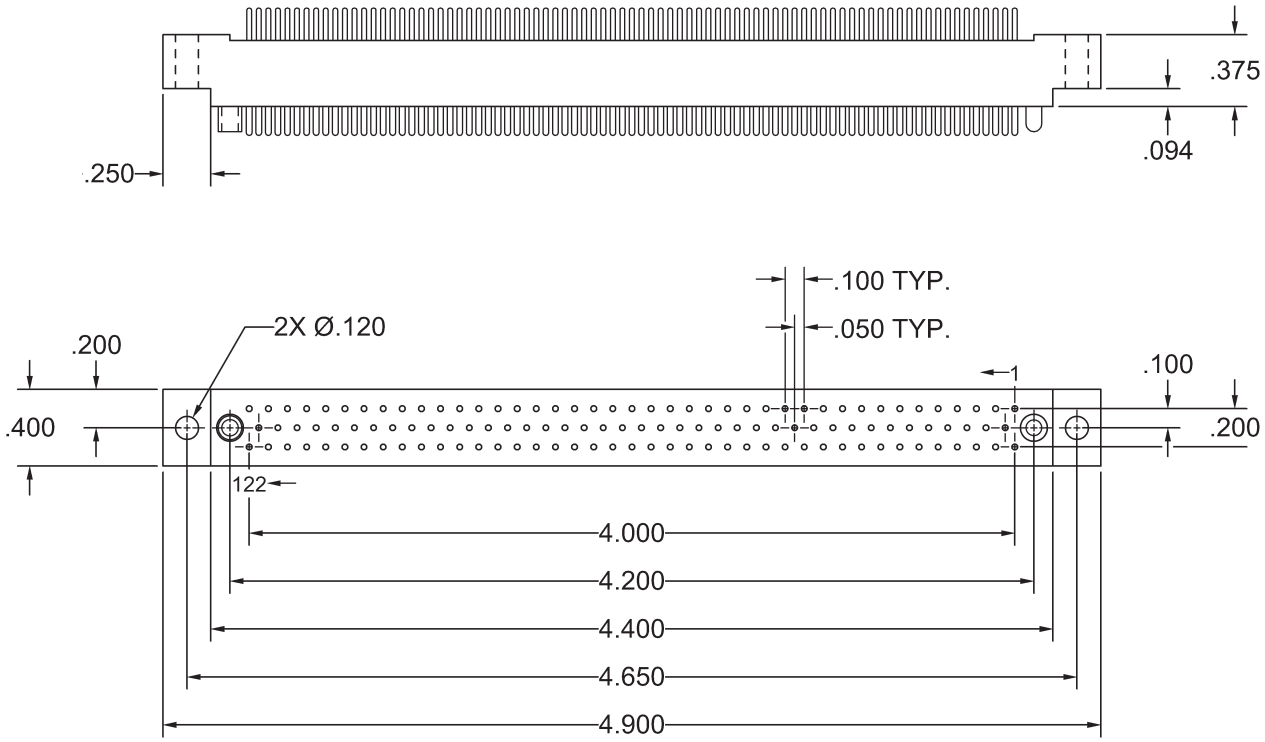

REFER TO APPENDIX FOR TERMINATION DETAILS, HARDWARE STYLES, POLARIZATION CHART, AND PWB PATTERNS

PLUG, RIGHT ANGLE
STYLE HGM122 MEE, MLE, MXE

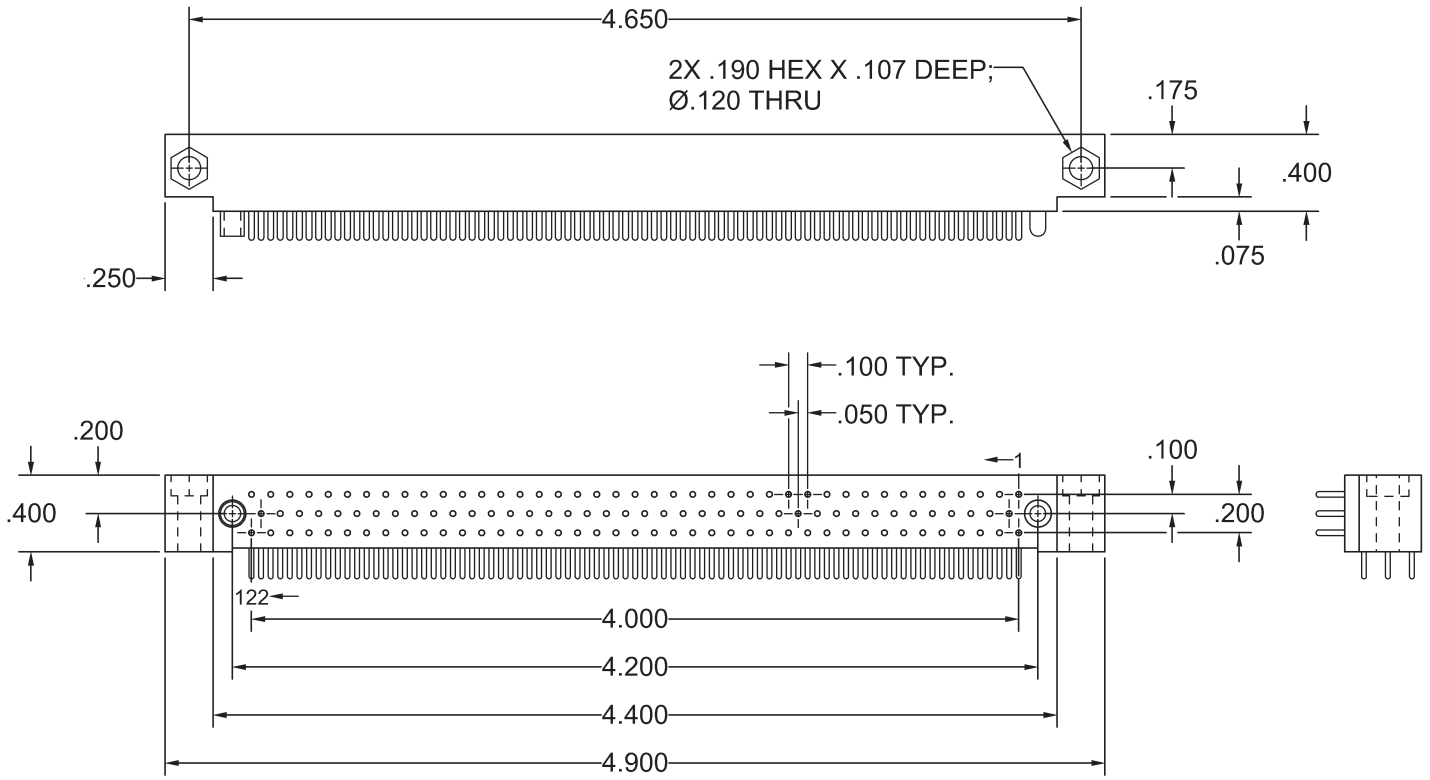

REFER TO APPENDIX FOR TERMINATION DETAILS, HARDWARE STYLES, POLARIZATION CHART, AND PWB PATTERNS

PLUG, COMPLIANT
STYLE HGM122 MVE

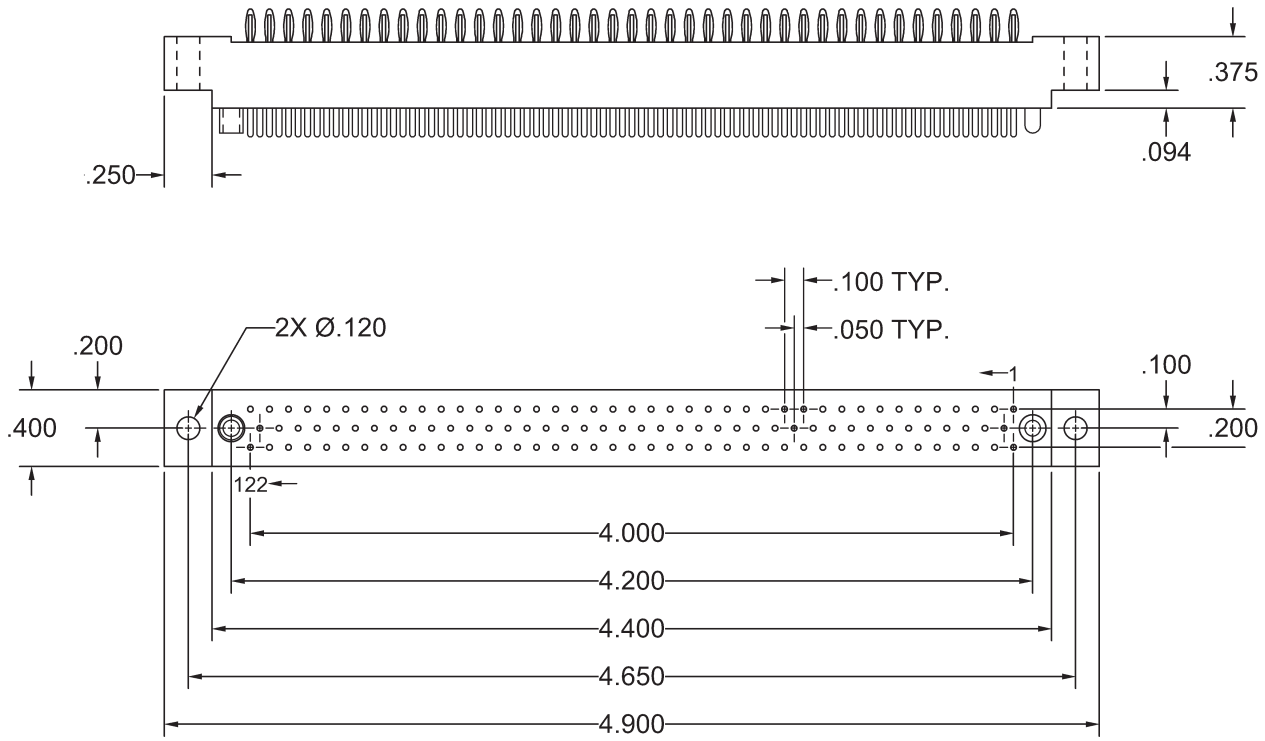

REFER TO APPENDIX FOR TERMINATION DETAILS, HARDWARE STYLES, POLARIZATION CHART, AND PWB PATTERNS

RECEPTACLE, STACKING
STYLE HGM160 FAE9, FVEA

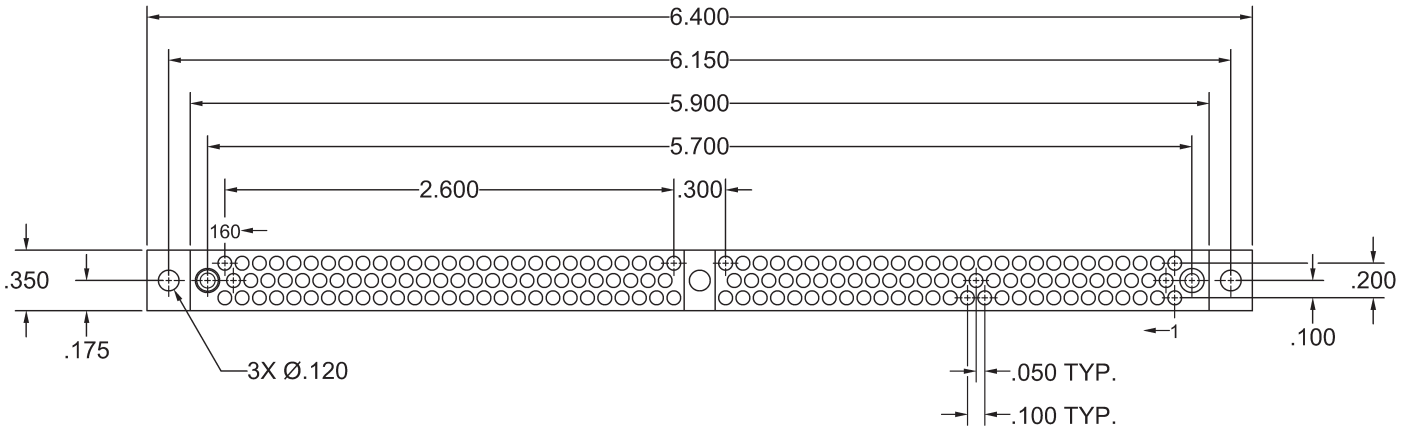

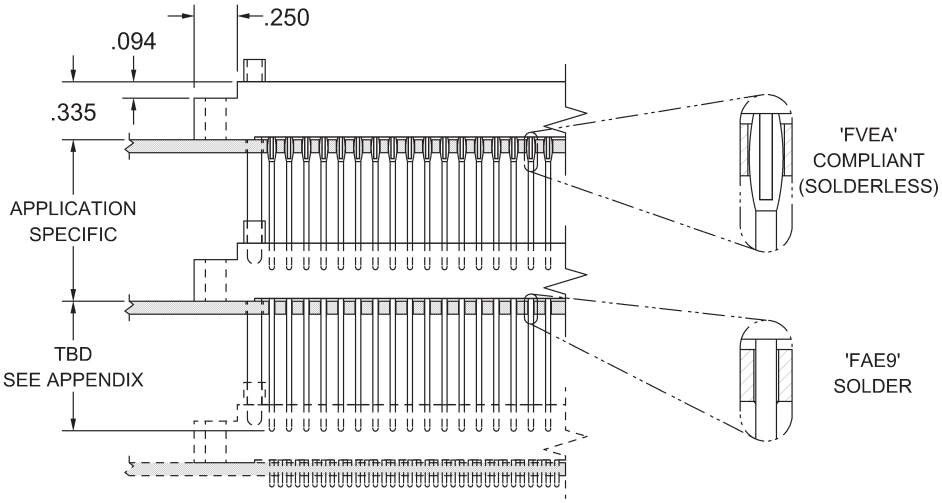

REFER TO APPENDIX FOR TERMINATION DETAILS, HARDWARE STYLES, POLARIZATION CHART, AND PWB PATTERNS

RECEPTACLE, STRAIGHT
STYLE HGM160 FBE, FDE, FSE, FWE

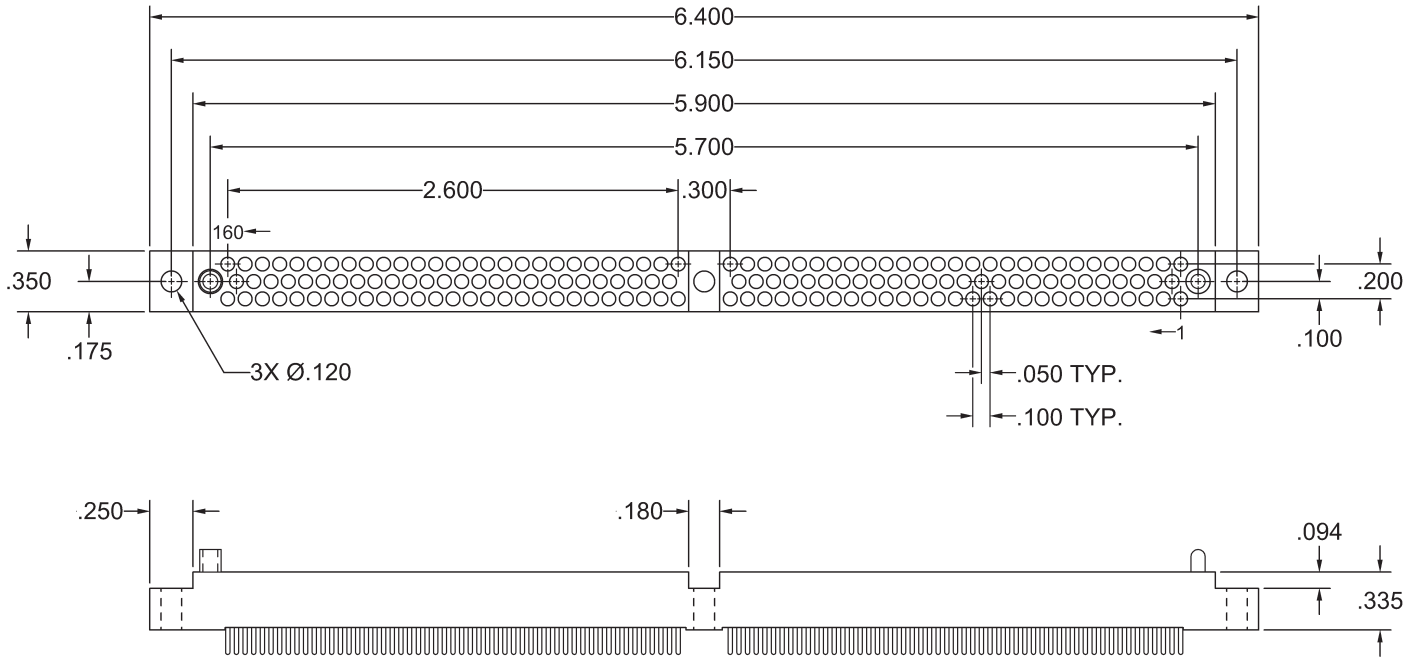

REFER TO APPENDIX FOR TERMINATION DETAILS, HARDWARE STYLES, POLARIZATION CHART, AND PWB PATTERNS

RECEPTACLE, RIGHT ANGLE
STYLE HGM160 FEE

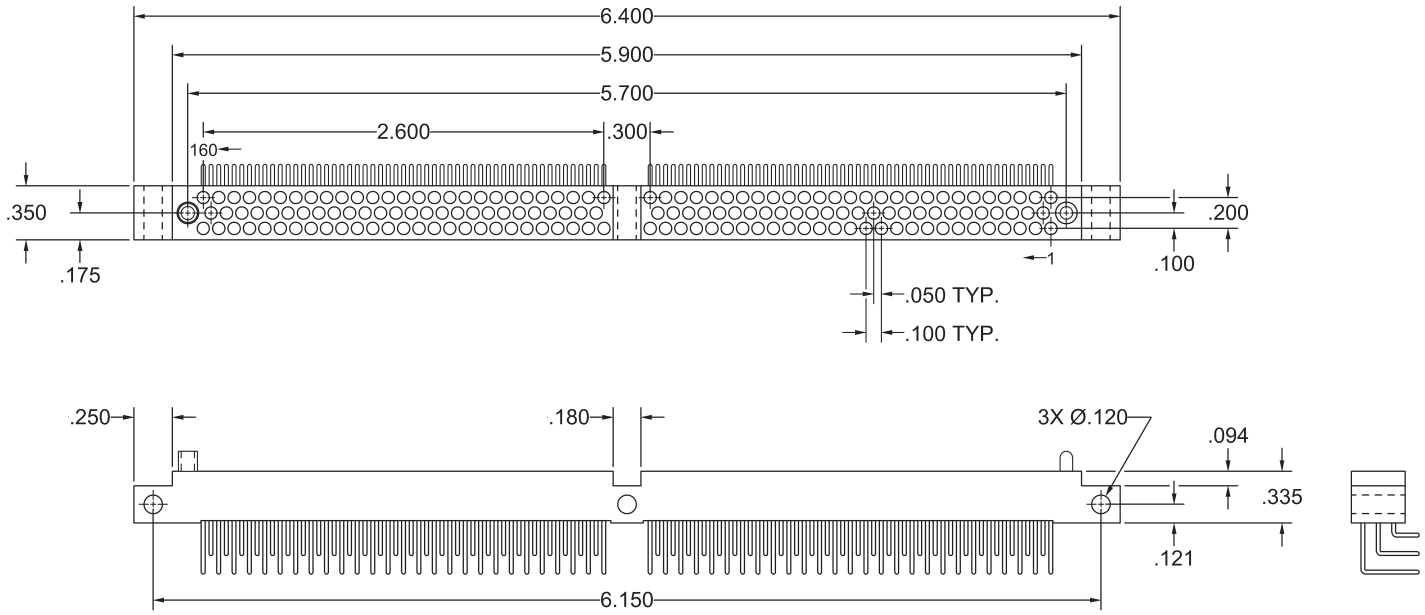

REFER TO APPENDIX FOR TERMINATION DETAILS, HARDWARE STYLES, POLARIZATION CHART, AND PWB PATTERNS

RECEPTACLE, COMPLIANT
STYLE HGM160 FVE

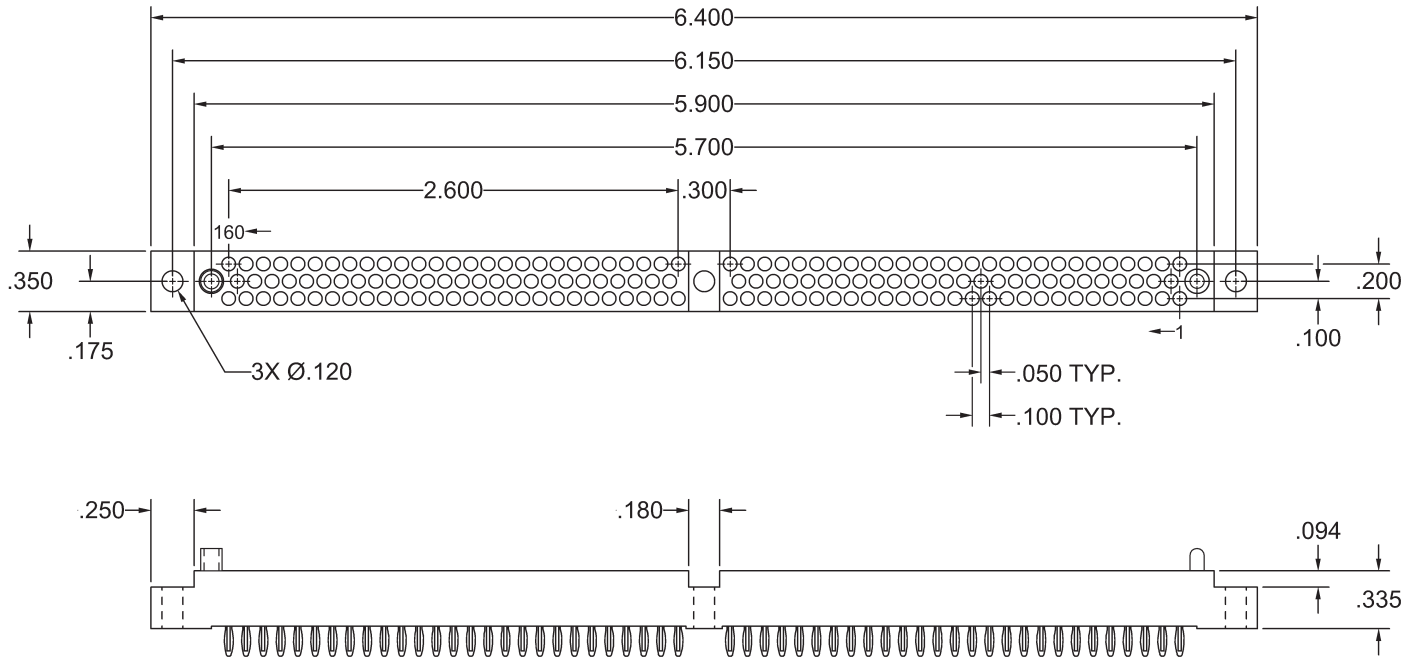

REFER TO APPENDIX FOR TERMINATION DETAILS, HARDWARE STYLES, POLARIZATION CHART, AND PWB PATTERNS

PLUG, STACKING
STYLE HGM160 MAE9, MVEA

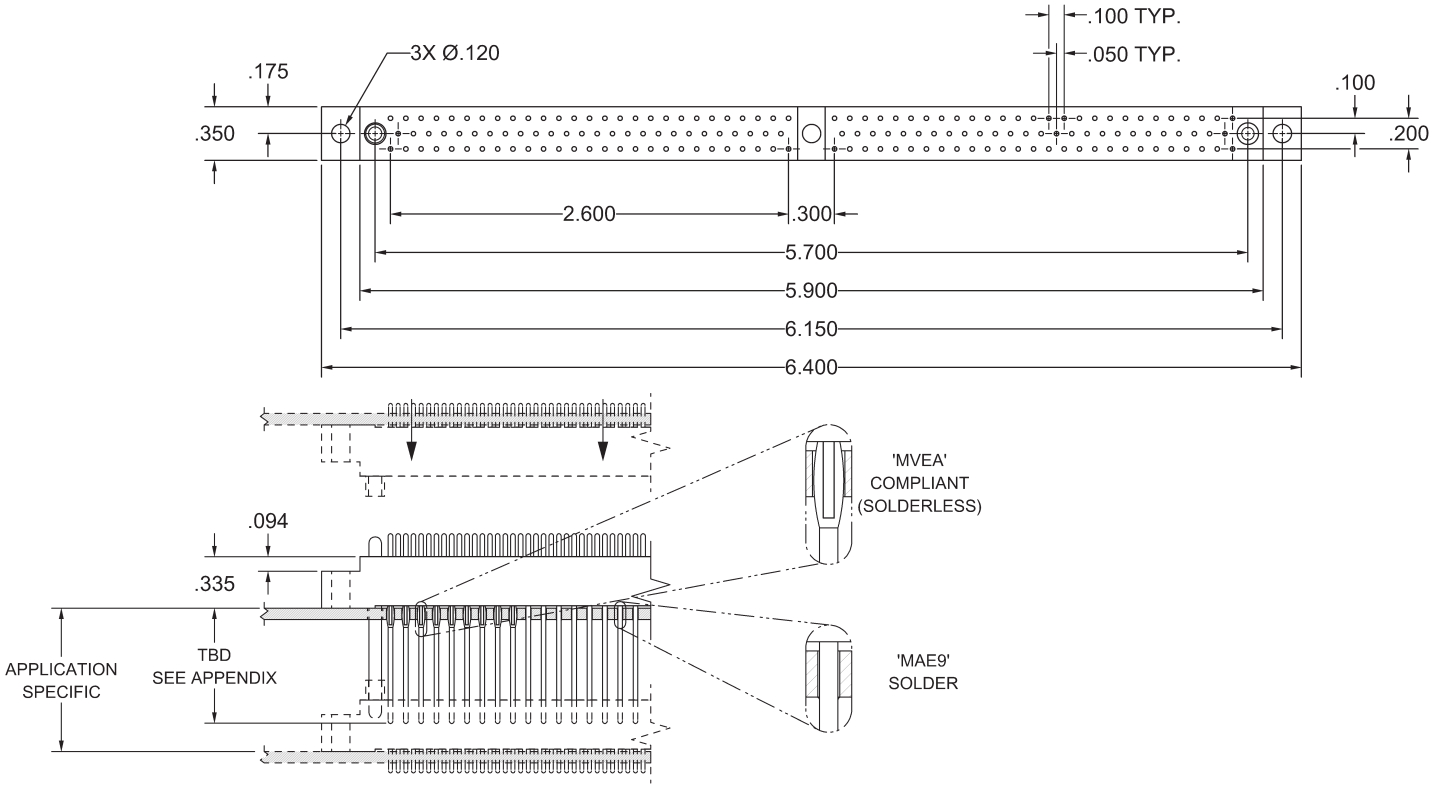

REFER TO APPENDIX FOR TERMINATION DETAILS, HARDWARE STYLES, POLARIZATION CHART, AND PWB PATTERNS

PLUG, STRAIGHT
STYLE HGM160 MBE, MDE, MSE, MWE

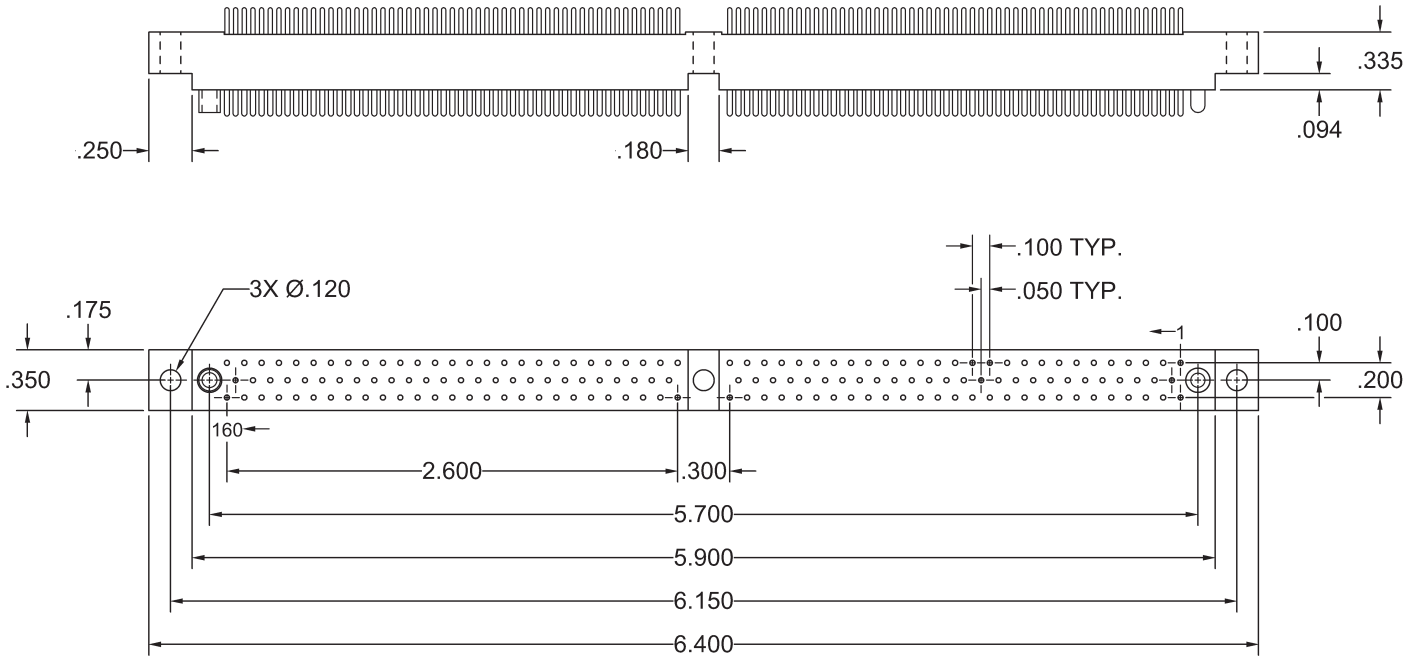

REFER TO APPENDIX FOR TERMINATION DETAILS, HARDWARE STYLES, POLARIZATION CHART, AND PWB PATTERNS

PLUG, RIGHT ANGLE
STYLE HGM160 MEE, MLE, MXE

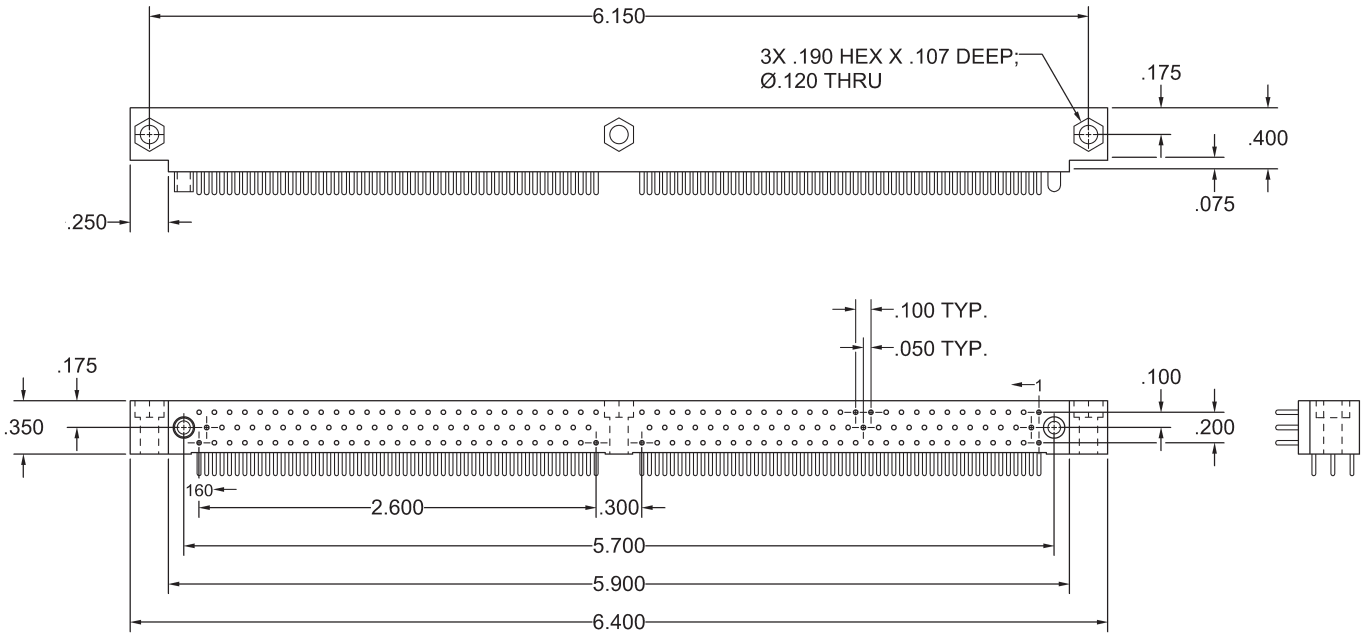

REFER TO APPENDIX FOR TERMINATION DETAILS, HARDWARE STYLES, POLARIZATION CHART, AND PWB PATTERNS

PLUG, COMPLIANT
STYLE HGM160 MVE

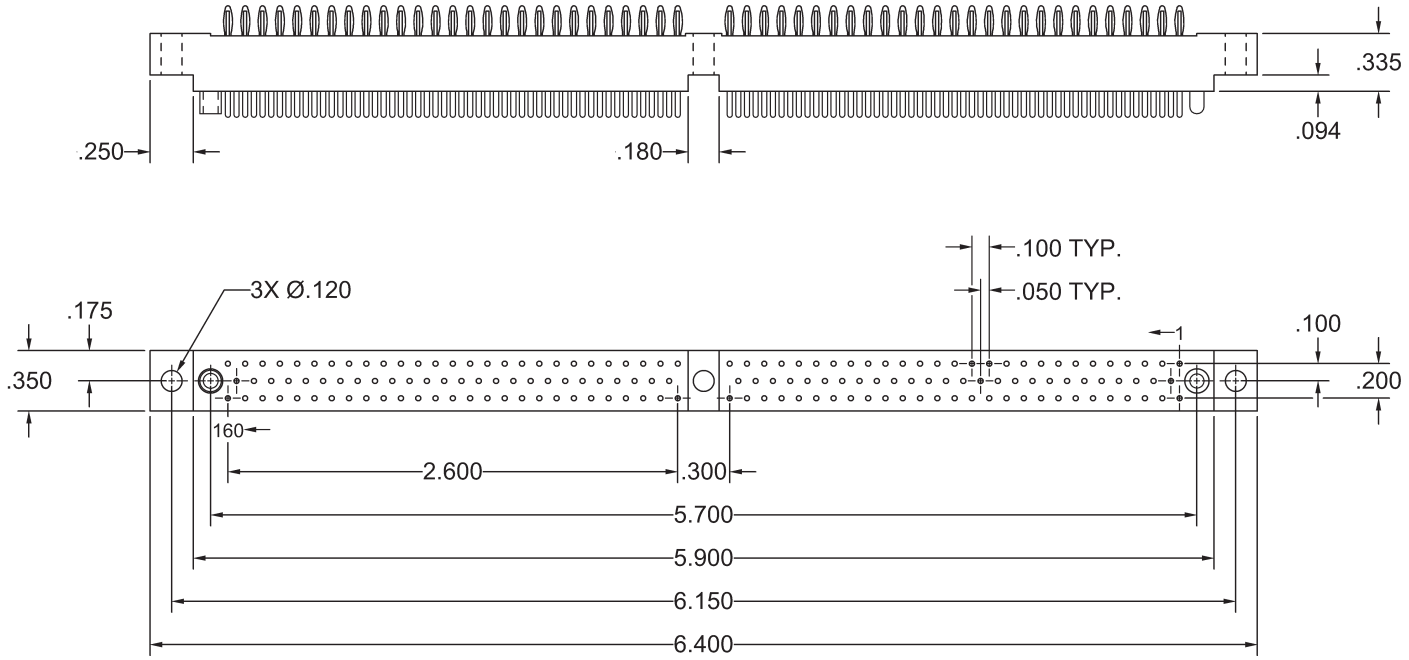

REFER TO APPENDIX FOR TERMINATION DETAILS, HARDWARE STYLES, POLARIZATION CHART, AND PWB PATTERNS

RECEPTACLE, STACKING
STYLE HGM208 FAE9, FVEA

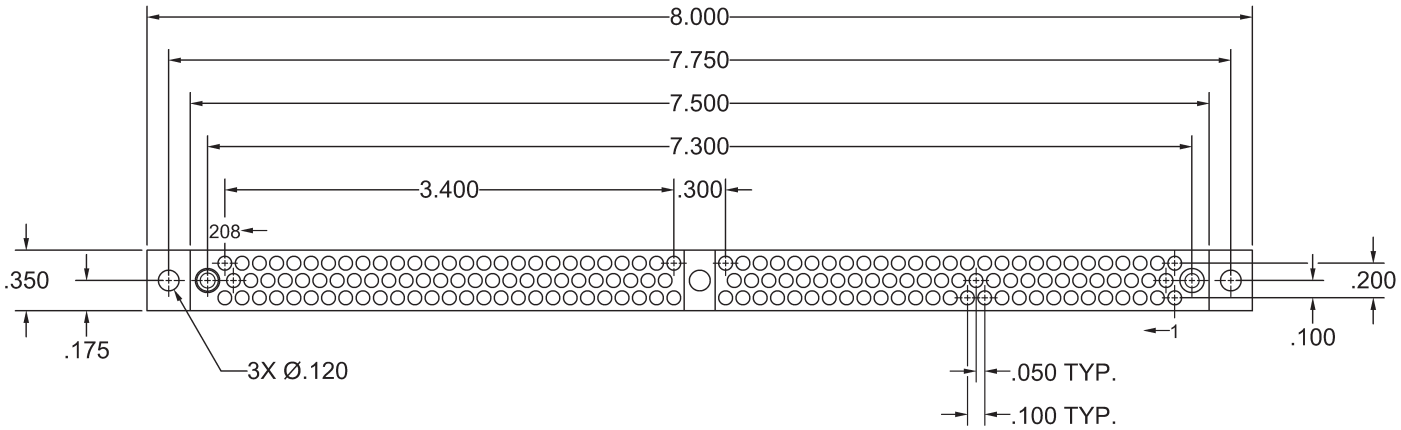

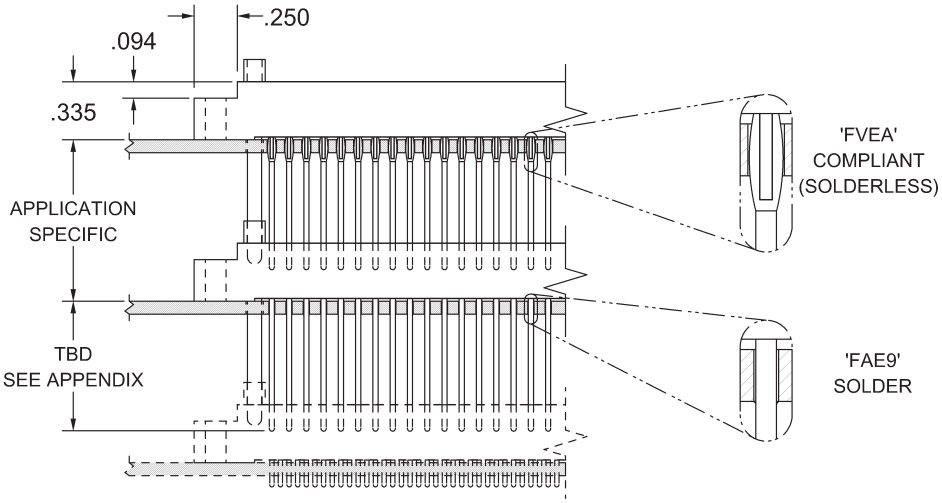

REFER TO APPENDIX FOR TERMINATION DETAILS, HARDWARE STYLES, POLARIZATION CHART, AND PWB PATTERNS

RECEPTACLE, STRAIGHT
STYLE HGM208 FBE, FDE, FSE, FWE

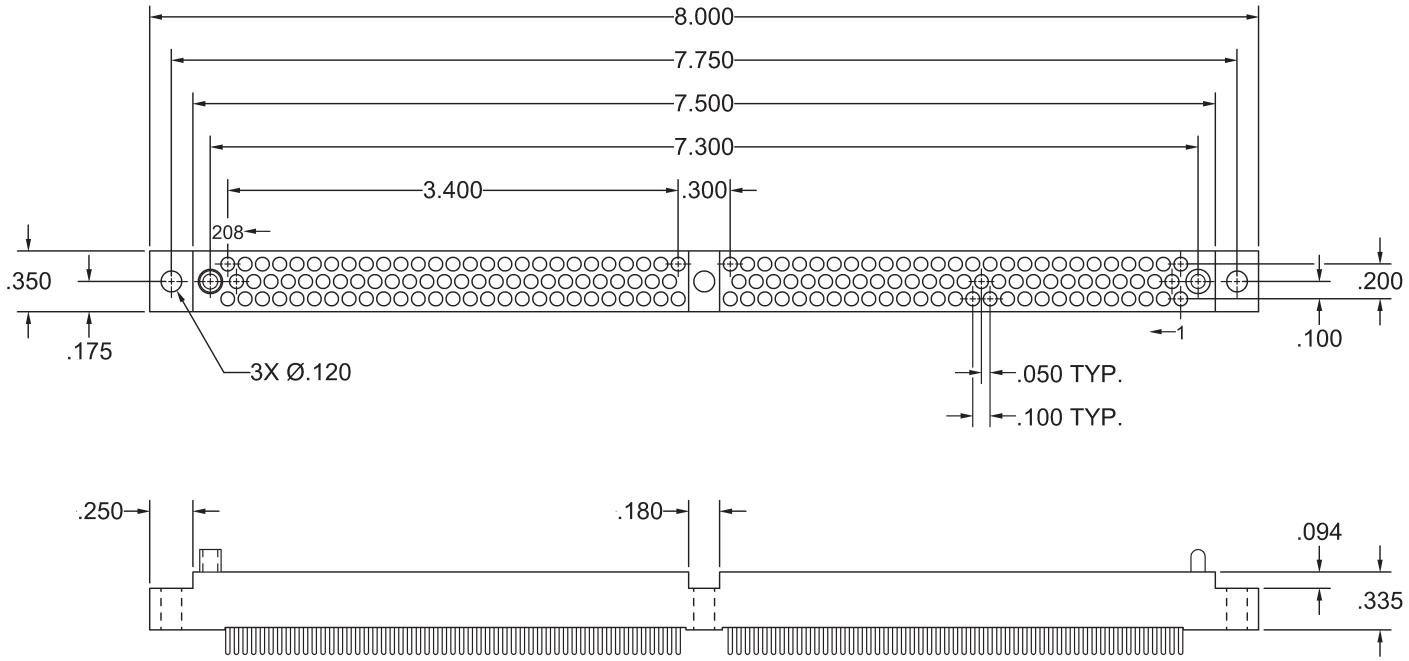

REFER TO APPENDIX FOR TERMINATION DETAILS, HARDWARE STYLES, POLARIZATION CHART, AND PWB PATTERNS

RECEPTACLE, RIGHT ANGLE
STYLE HGM208 FEE

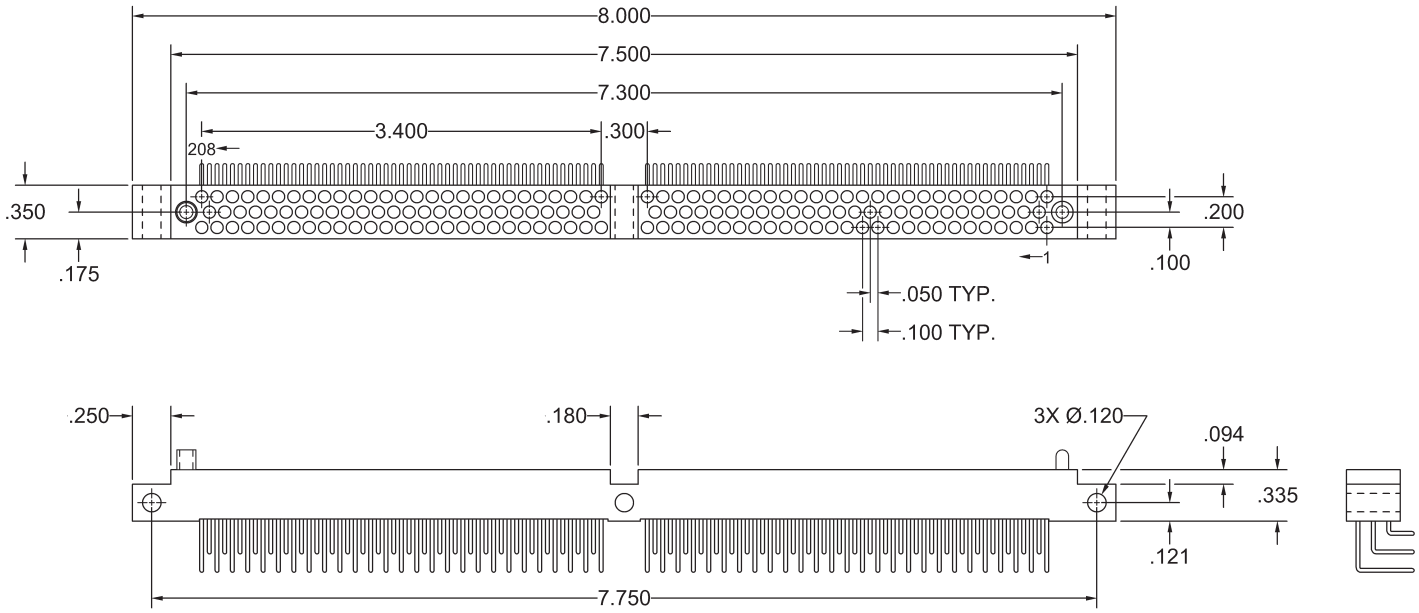

REFER TO APPENDIX FOR TERMINATION DETAILS, HARDWARE STYLES, POLARIZATION CHART, AND PWB PATTERNS

RECEPTACLE, COMPLIANT
STYLE HGM208 FVE

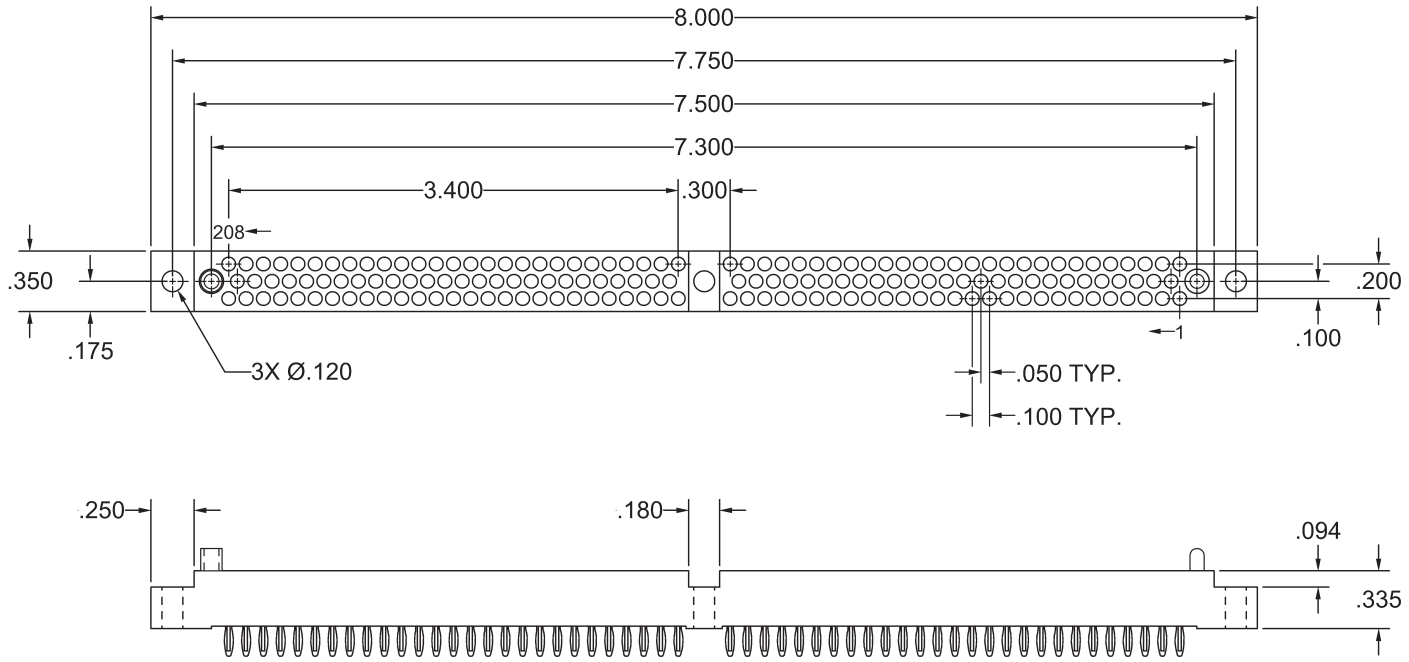

REFER TO APPENDIX FOR TERMINATION DETAILS, HARDWARE STYLES, POLARIZATION CHART, AND PWB PATTERNS

PLUG, STACKING
STYLE HGM208 MAE9, MVEA

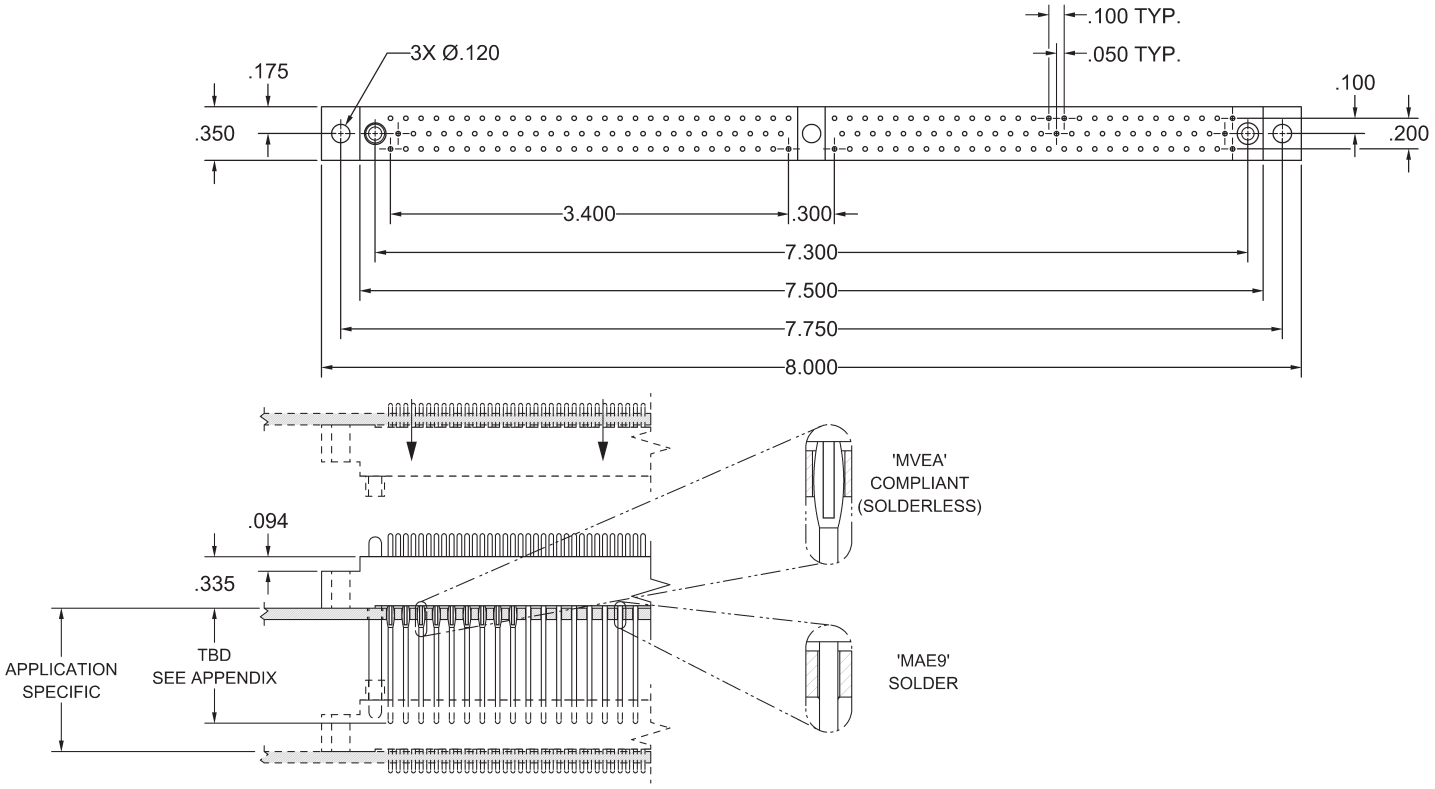

REFER TO APPENDIX FOR TERMINATION DETAILS, HARDWARE STYLES, POLARIZATION CHART, AND PWB PATTERNS

PLUG, STRAIGHT
STYLE HGM208 MBE, MDE, MSE, MWE

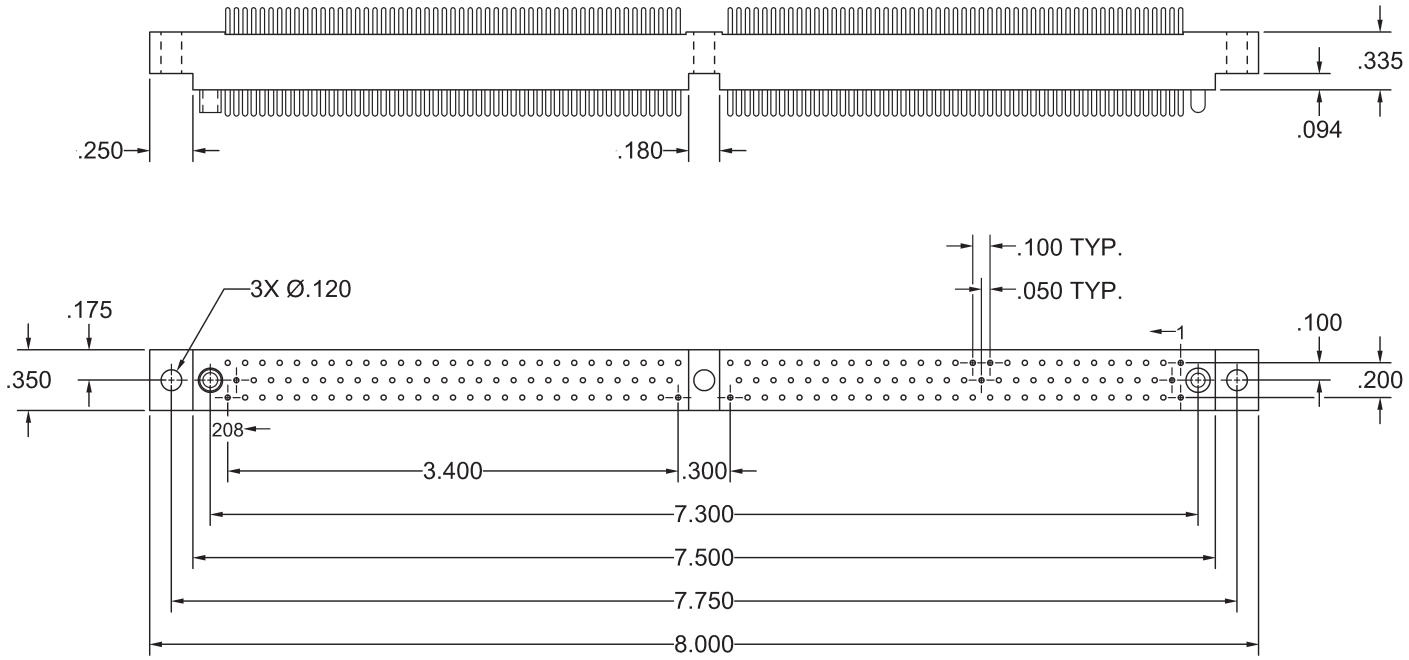

REFER TO APPENDIX FOR TERMINATION DETAILS, HARDWARE STYLES, POLARIZATION CHART, AND PWB PATTERNS

PLUG, RIGHT ANGLE
STYLE HGM208 MEE, MLE, MXE

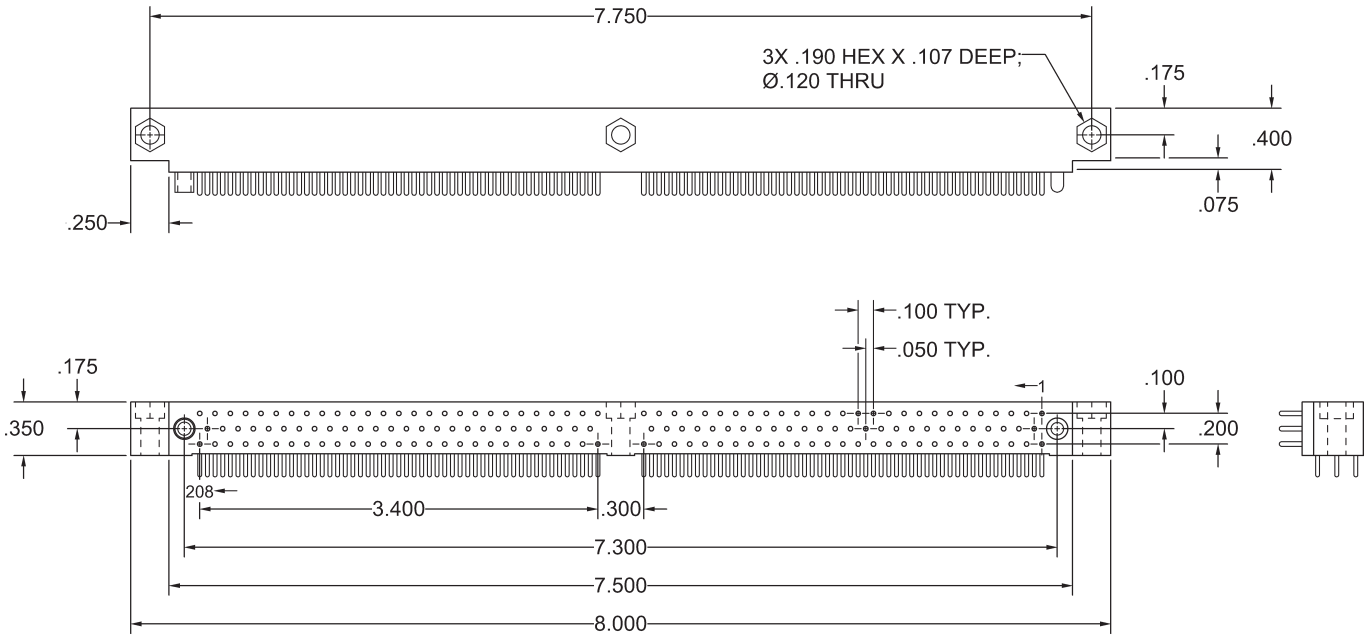

REFER TO APPENDIX FOR TERMINATION DETAILS, HARDWARE STYLES, POLARIZATION CHART, AND PWB PATTERNS

PLUG, COMPLIANT
STYLE HGM208 MVE

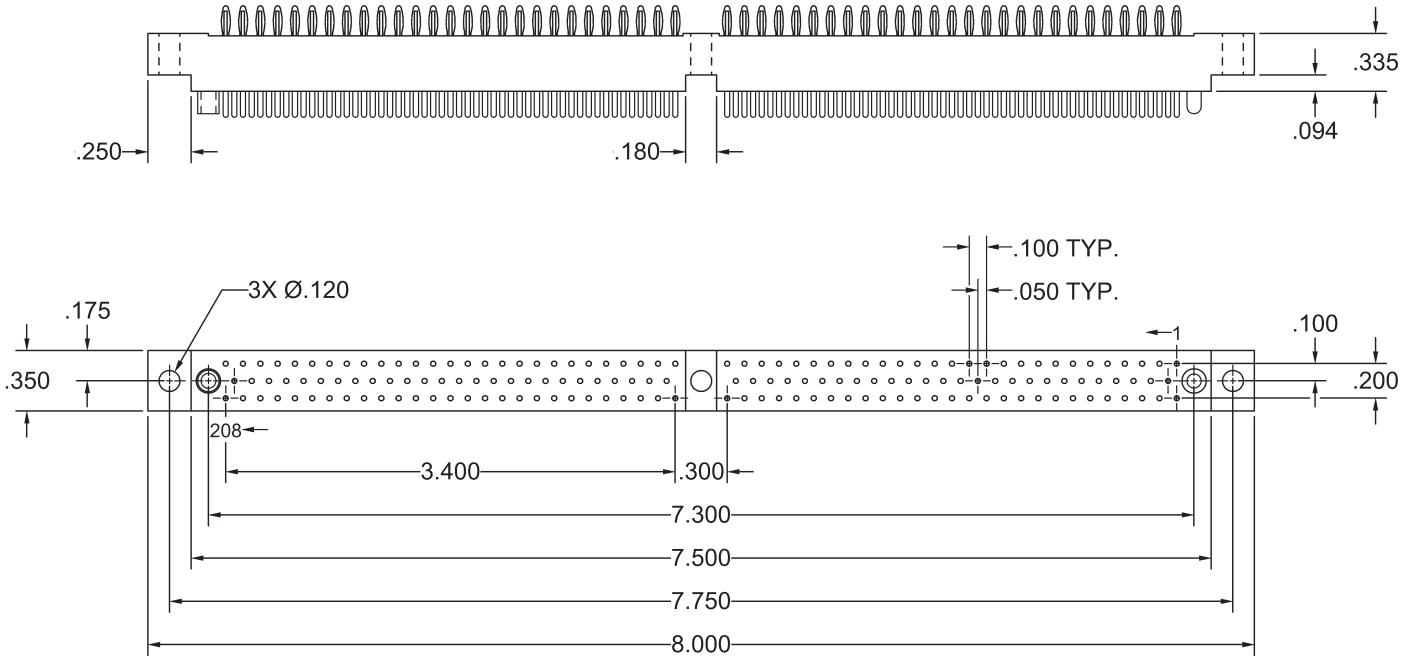

REFER TO APPENDIX FOR TERMINATION DETAILS, HARDWARE STYLES, POLARIZATION CHART, AND PWB PATTERNS

RECEPTACLE, STRAIGHT
STYLE HGM122 FBE, FDE, FSE, FWE

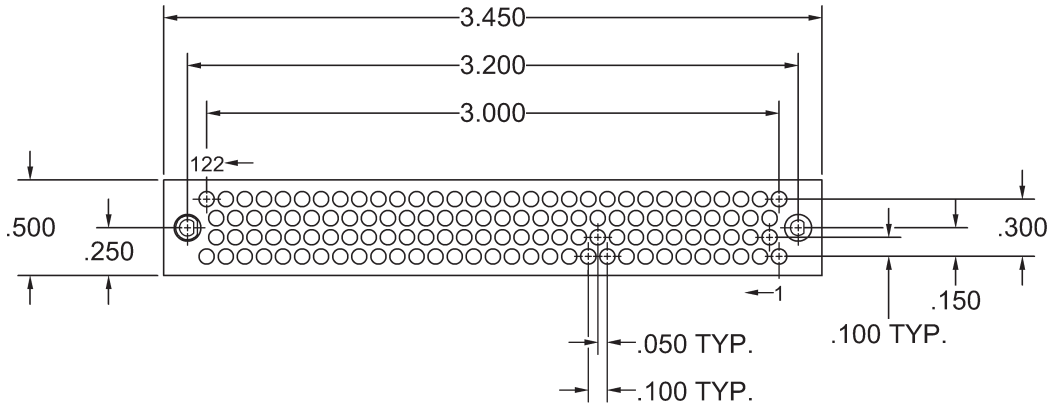

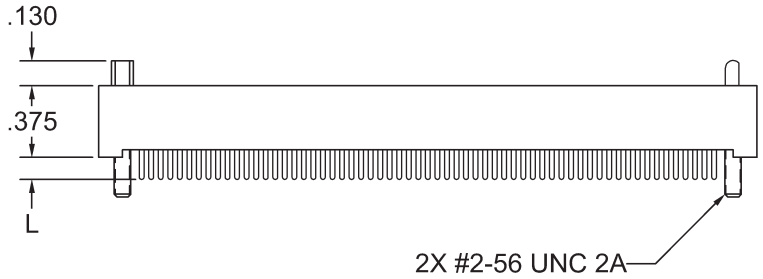

RECEPTACLE, RIGHT ANGLE
STYLE HGM122 FEE

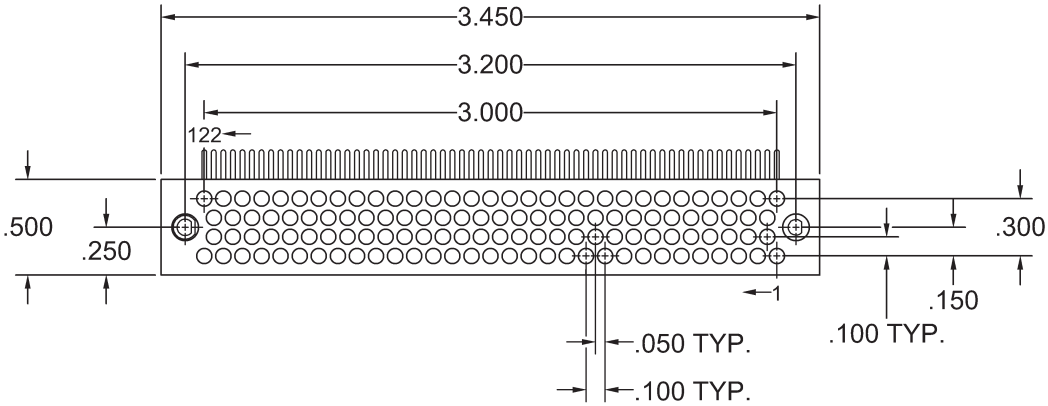

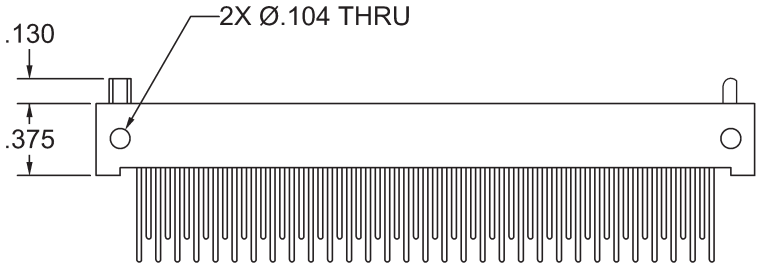

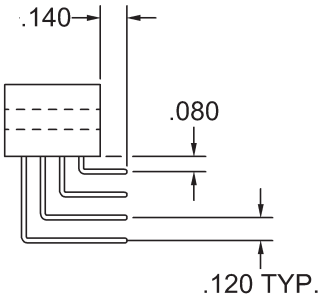

PLUG, STRAIGHT
STYLE HGM122 MBE, MDE, MSE, MWE

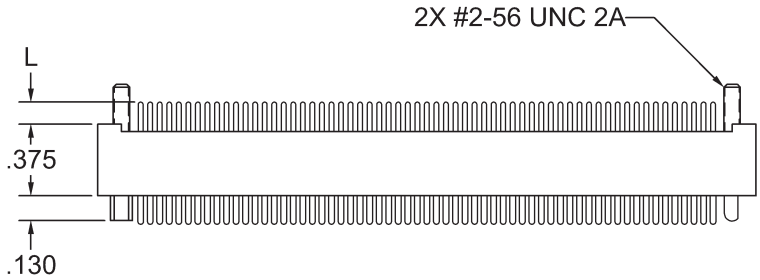

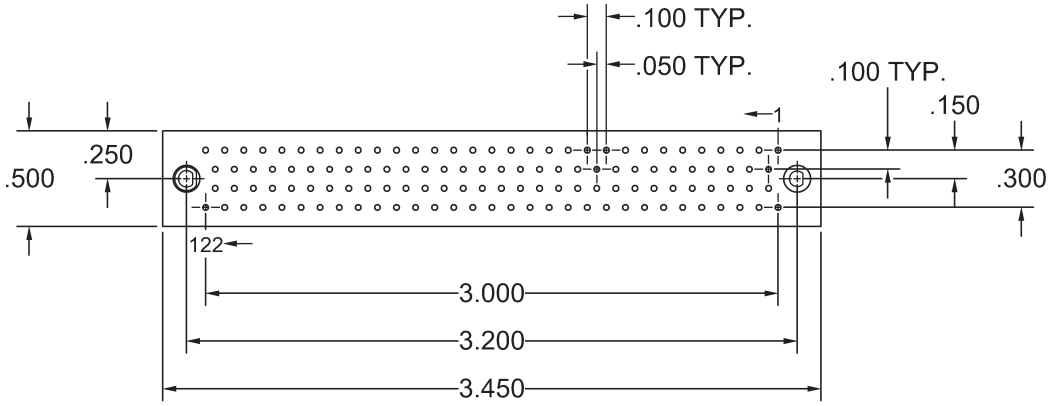

PLUG, RIGHT ANGLE
STYLE HGM122 MEE

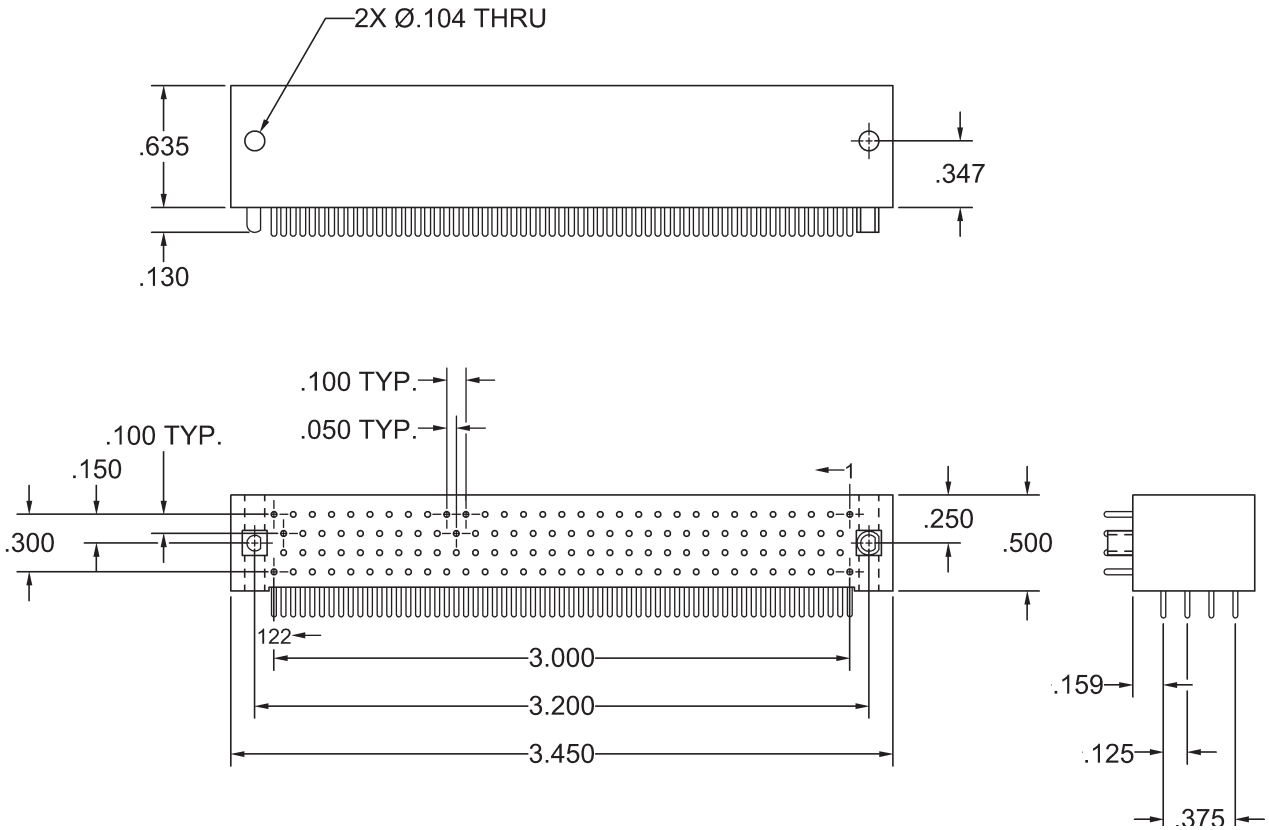

TERMINATION STYLES - 2ROW
RECEPTACLE
HARDWARE OMITTED FOR CLARITY

FAE9
SAE9
STACKING

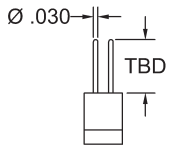

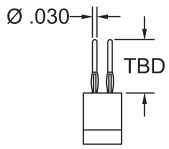

FVEA
SVEA
COMPLIANT
STACKING

FBE
SBE
FLEX CABLE

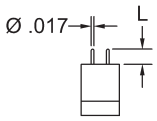

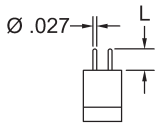

FDE
SDE
DIP SOLDER

FEE
SEE
DIP SOLDER
RIGHT ANGLE

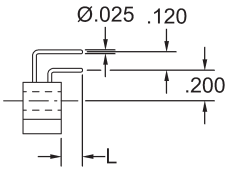

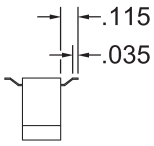

FRE
SRE
SURFACE
MOUNT

FSE
SSE
SOLDER CUP

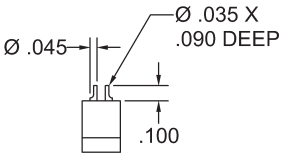

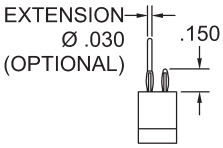

FVE
SVE
COMPLIANT

FWE
SWE
WIRE WRAP

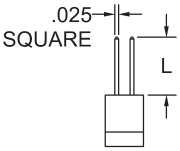

TERMINATION STYLES - 2 ROW
PLUG, RIGHT ANGLE
HARDWARE OMITTED FOR CLARITY

MEE
DIP SOLDER
RIGHT ANGLE

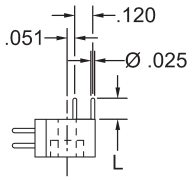

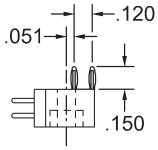

MLE
COMPLIANT
RIGHT ANGLE

MXE
SOLDER CUP
RIGHT ANGLE

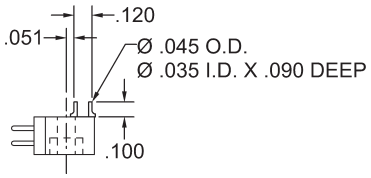

TERMINATION STYLES - 2 ROW
PLUG, STRAIGHT
HARDWARE OMITTED FOR CLARITY

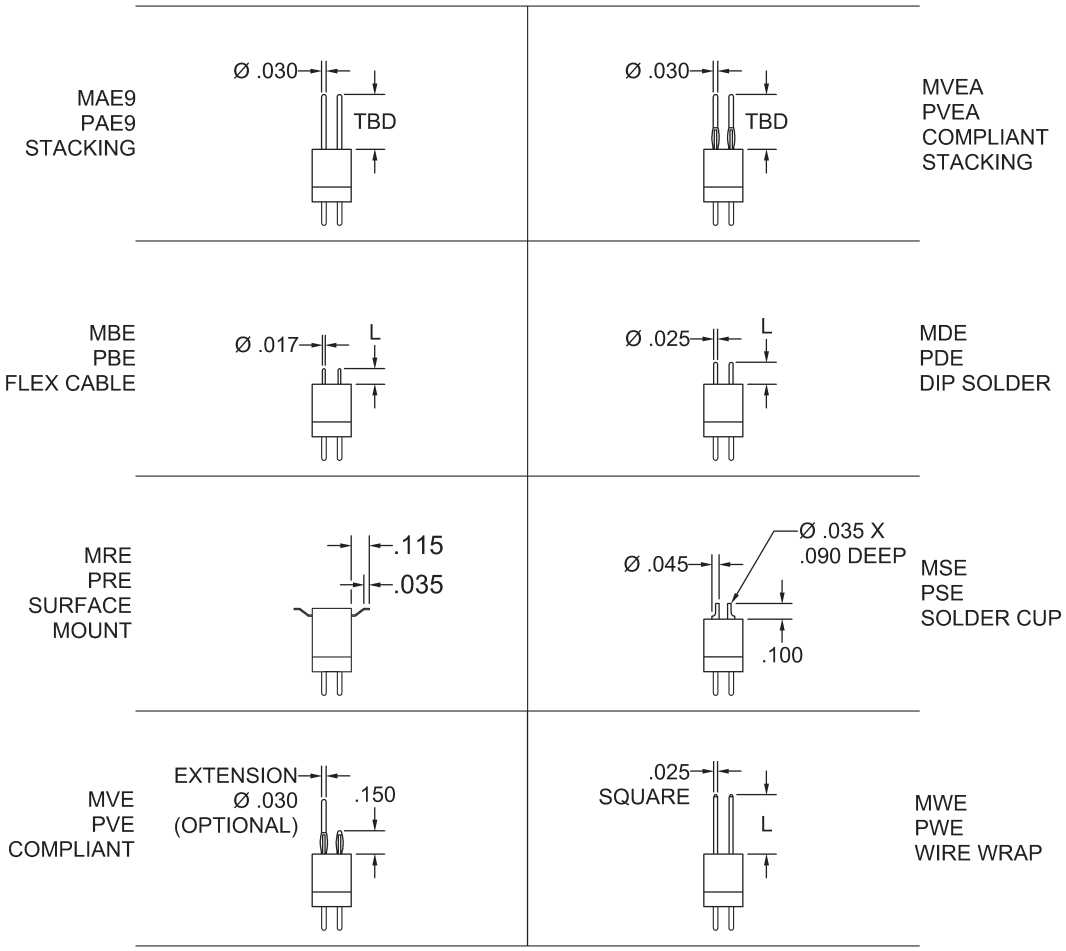

TERMINATION STYLES - 2 ROW

PLUG, STRAIGHT, HIGH PROFILE, 090 & 120 ONLY

HARDWARE OMITTED FOR CLARITY

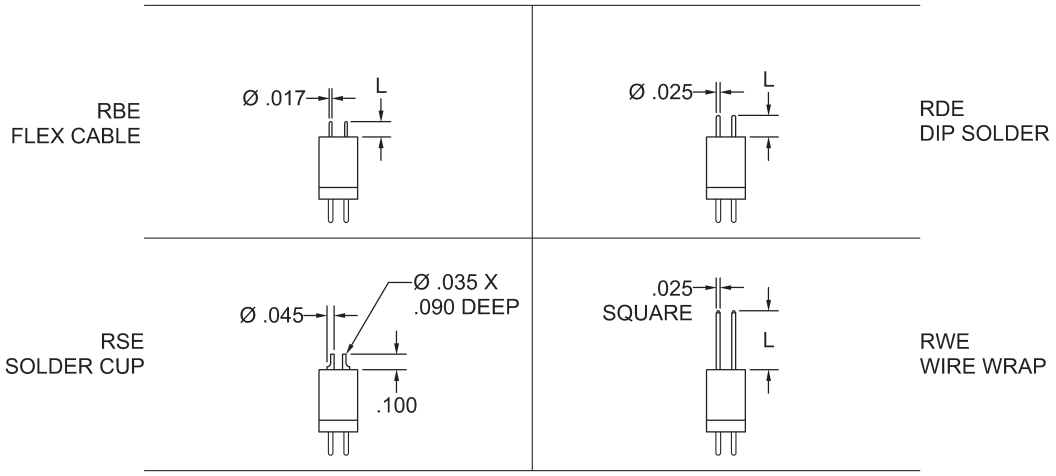

TERMINATION STYLES - 3 ROW
RECEPTACLE
HARDWARE OMITTED FOR CLARITY

FAE9
STACKING

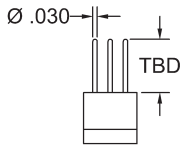

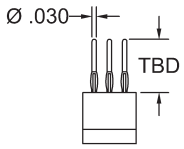

FVEA
COMPLIANT
STACKING

FBE
FLEX CABLE

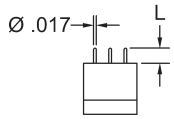

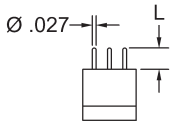

FDE
DIP SOLDER

FVE
COMPLIANT

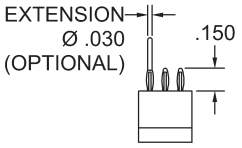

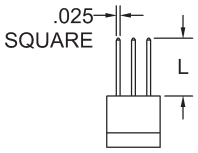

FWE
WIRE WRAP

FSE
SOLDER CUP

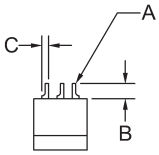

CONNECTOR	A	B	C
HGM[050-104]	Ø .039 X.090 DEEP	0.18	0.055
HGM122	Ø .039 X.090 DEEP	0.15	0.055
HGM160	Ø .035 X.090 DEEP	0.10	0.045
HGM208	Ø .035 X.090 DEEP	0.10	0.045

FEE
DIP SOLDER
RIGHT ANGLE

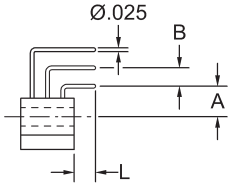

CONNECTOR	A	B
HGM[050-104]	0.200	0.120
HGM122	0.240	0.125
HGM160	0.200	0.120
HGM208	0.200	0.120

TERMINATION STYLES - 3 ROW
PLUG, RIGHT ANGLE
HARDWARE OMITTED FOR CLARITY

MEE
DIP SOLDER
RIGHT ANGLE

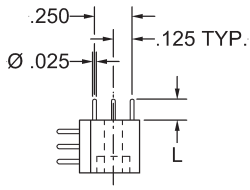

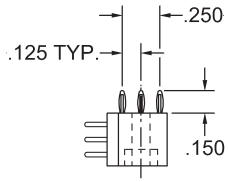

MLE
COMPLIANT
RIGHT ANGLE

MXE
SOLDER CUP
RIGHT ANGLE

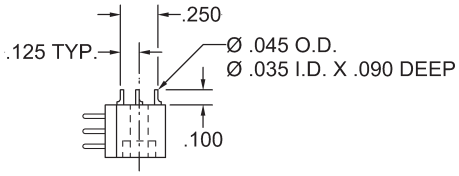

TERMINATION STYLES - 3 ROW
PLUG, STRAIGHT
HARDWARE OMITTED FOR CLARITY

MAE9
STACKING

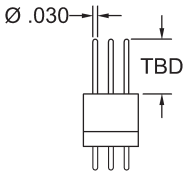

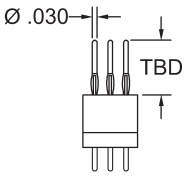

MVEA
COMPLIANT
STACKING

MBE
FLEX CABLE

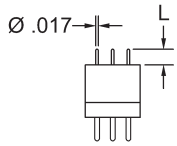

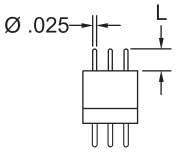

MDE
DIP SOLDER

MVE
COMPLIANT

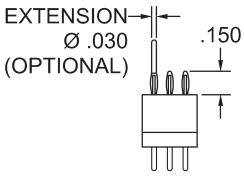

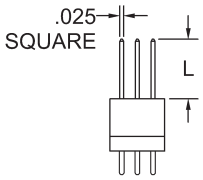

MWE
WIRE WRAP

MSE
SOLDER CUP

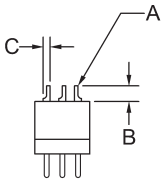

CONNECTOR	A	B	C
HGM[050-104]	Ø .039 X.090 DEEP	0.18	0.055
HGM122	Ø .039 X.090 DEEP	0.15	0.055
HGM160	Ø .035 X.090 DEEP	0.10	0.045
HGM208	Ø .035 X.090 DEEP	0.10	0.045

HARDWARE STYLES 2 & 3 ROW

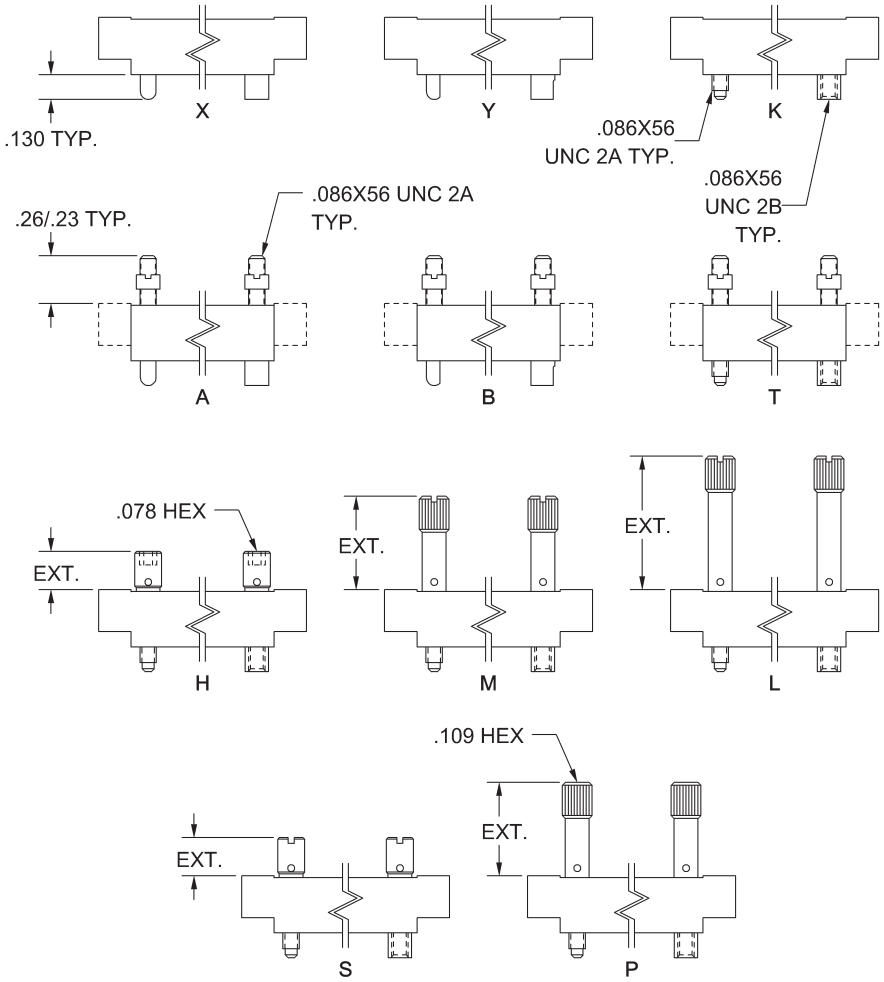

HARDWARE EXTENSION (EXT.)		
STYLE	LOW PROFILE INSULATOR	HIGH PROFILE INSULATOR
H,S	.200	.135
M,P	.500	.435
L	.700	.635

HARDWARE COMPATIBILITY											
	A	B	H	K	L	M	P	S	T	X	Y
A	●									●	
B		●									●
H				●					●		
K			●		●	●	●	●			
L				●					●		
M				●					●		
P				●					●		
S				●					●		
T			●		●	●	●	●			
X	●									●	
Y		●									●

POLARIZATION CHART 2 & 3 ROW

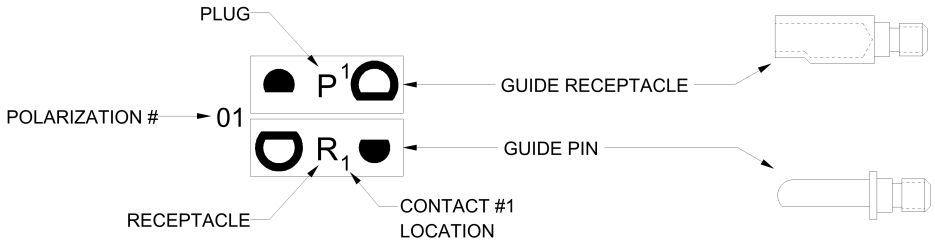

01 - 64 USE FOR HARDWARE STYLE 'Y' AND 'B'

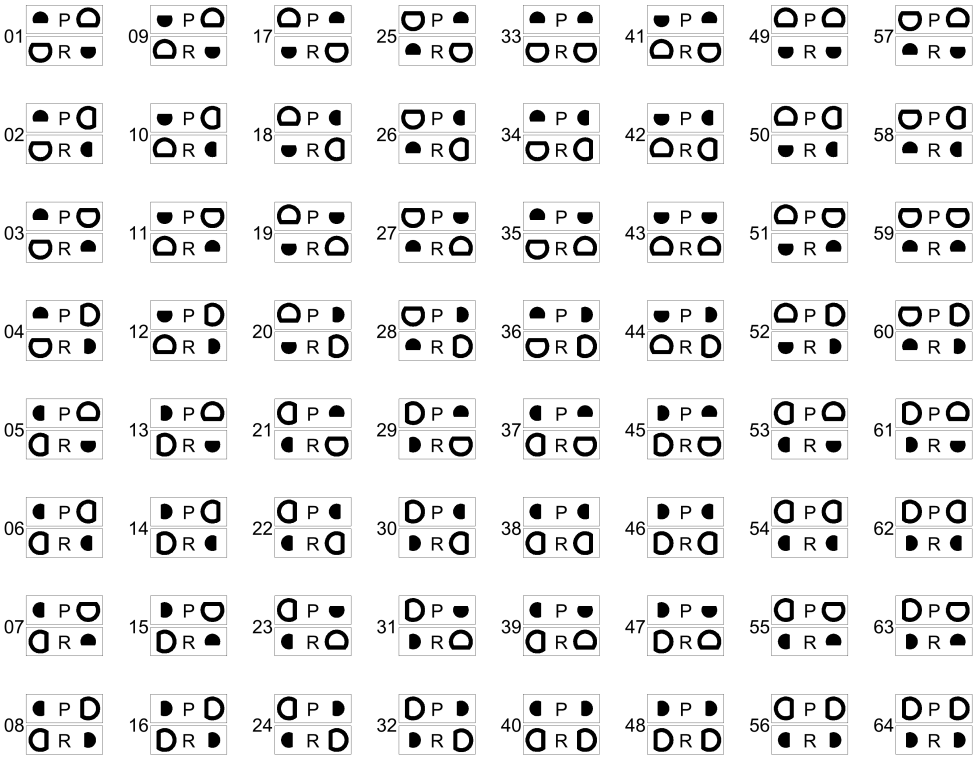

UNIVERSAL TEST

USE FOR OPTION: A,H,K,L,M,P,S,T,X

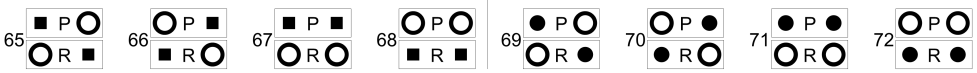

PWB PATTERN - 2 ROW
010-070, RECEPTACLE PATTERN
AS VIEWED FROM THE COMPONENT SIDE

F[A,D,V]E
M[D,V]E

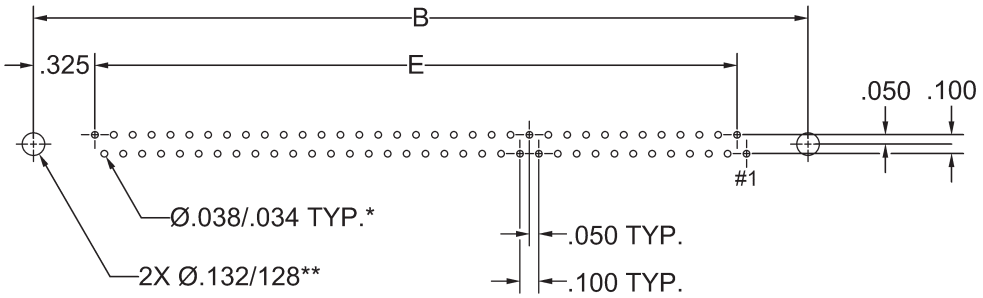

FEE

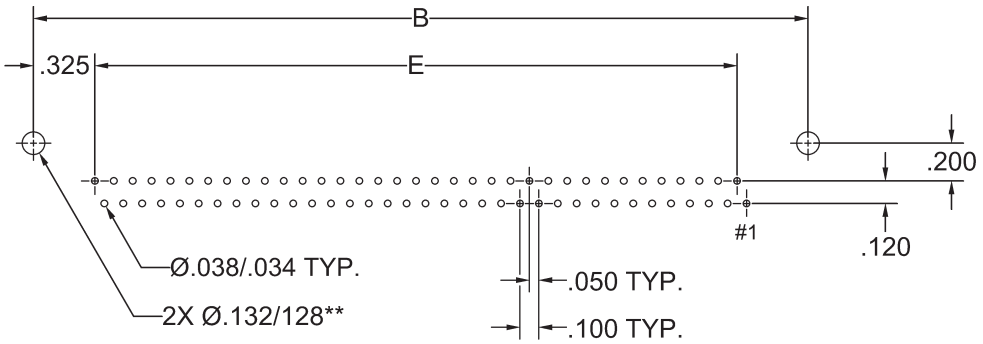

FRE
MRE

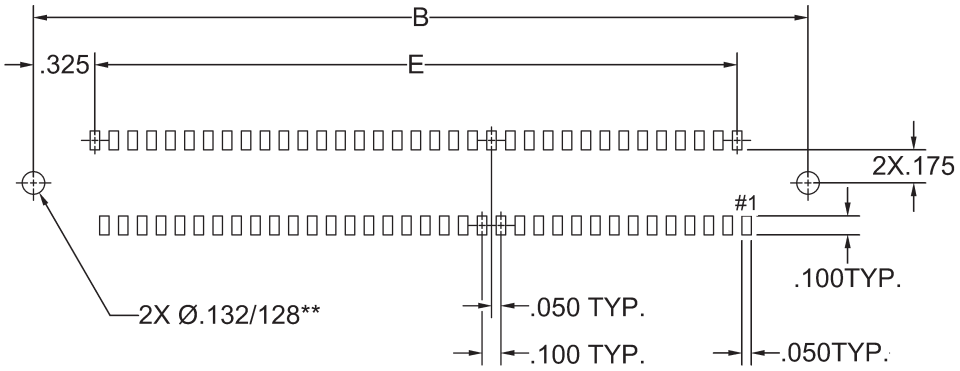

*.042/.038 RECOMMENDED HOLE SIZE FOR COMPLIANT TERMINATION STYLE CONTACTS.. FOR ALL OTHERS, HOLE SIZE SUBJECT TO USER MODIFICATION FOR APPLICATION OR ALTERNATIVE STANDARDS.

**RECOMMENDATION. MAY BE MODIFIED FOR APPLICATION OR ALTERNATIVE STANDARDS.

PWB PATTERN - 2 ROW
010-070, PLUG PATTERN
AS VIEWED FROM THE COMPONENTSIDE

M[E,L]E

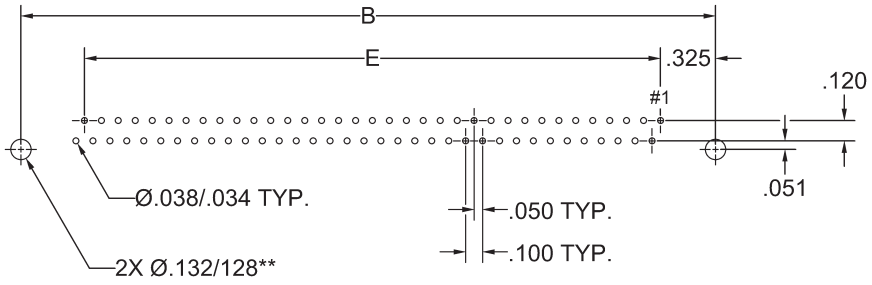

S[A,D,V]E
P[D,V]E

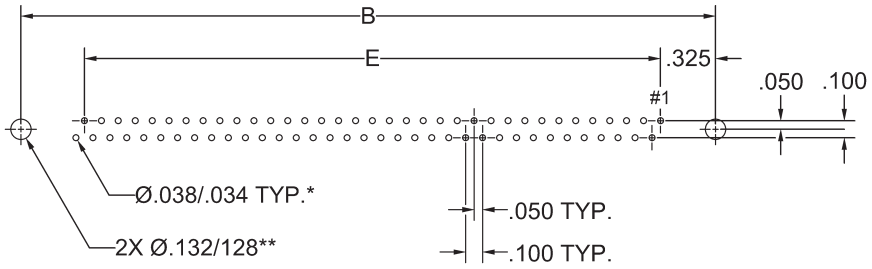

SEE

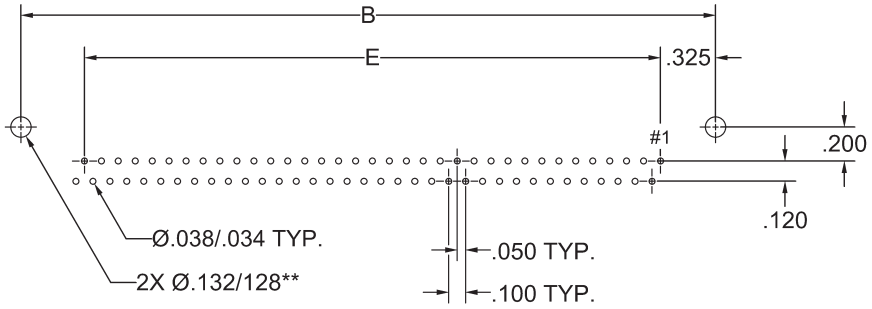

SRE
PRE

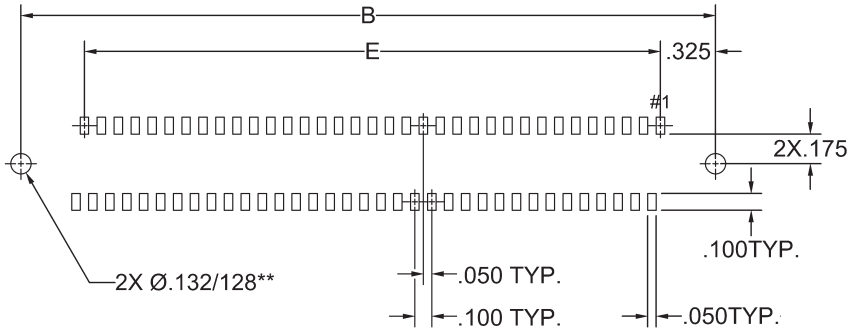

*.042/.038 RECOMMENDED HOLE SIZE FOR COMPLIANT TERMINATION STYLE CONTACTS. FOR ALL OTHERS, HOLE SIZE SUBJECT TO USER MODIFICATION FOR APPLICATION OR ALTERNATIVE STANDARDS.

**RECOMMENDATION. MAY BE MODIFIED FOR APPLICATION OR ALTERNATIVE STANDARDS.

PWB PATTERN - 2 ROW
090, RECEPTACLE PATTERN
AS VIEWED FROM THE COMPONENT SIDE

F[D,V]E

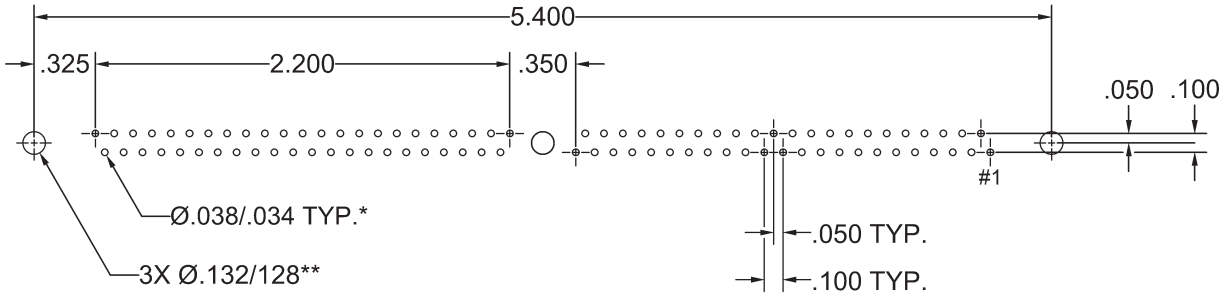

FEE

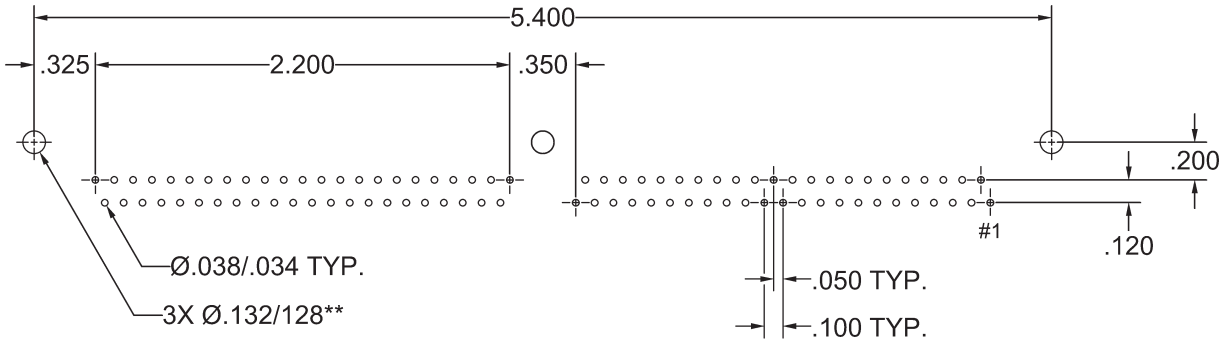

FRE

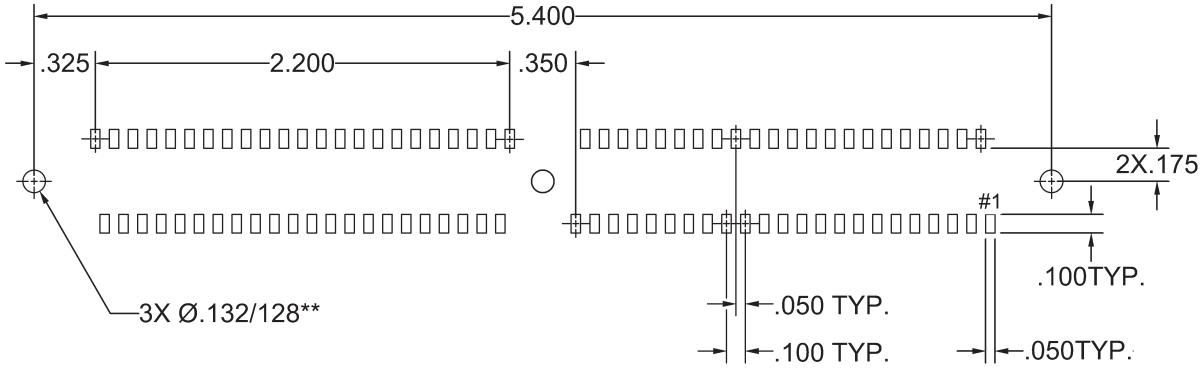

*.042/.038 RECOMMENDED HOLE SIZE FOR COMPLIANT TERMINATION STYLE CONTACTS.. FOR ALL OTHERS, HOLE SIZE SUBJECT TO USER MODIFICATION FOR APPLICATION OR ALTERNATIVE STANDARDS.

**RECOMMENDATION. MAY BE MODIFIED FOR APPLICATION OR ALTERNATIVE STANDARDS.

PWB PATTERN - 2 ROW
090, PLUG PATTERN
AS VIEWED FROM THE COMPONENT SIDE

MEE

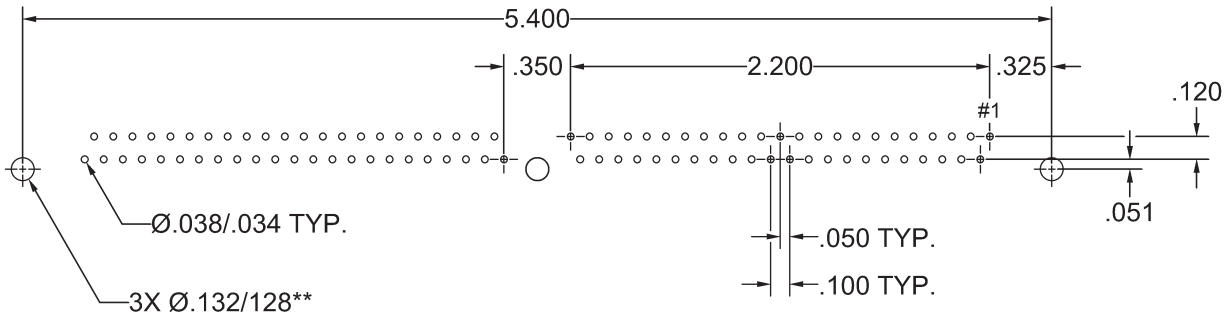

RDE

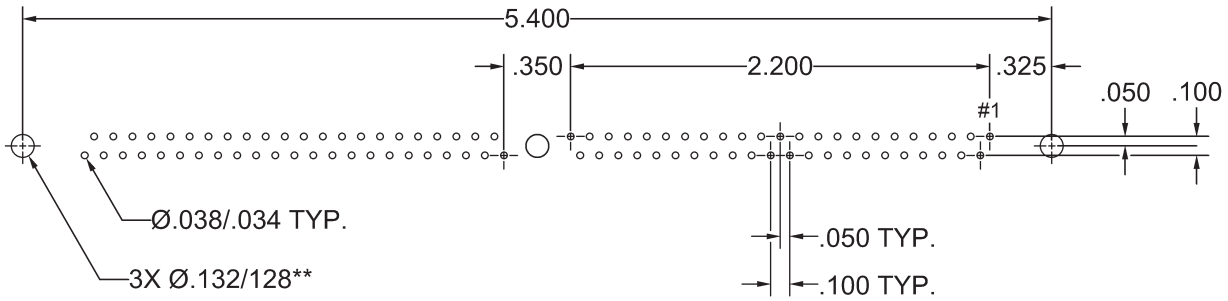

**RECOMMENDATION. MAY BE MODIFIED FOR APPLICATION OR ALTERNATIVE STANDARDS.

PWB PATTERN - 2 ROW
100, RECEPTACLE PATTERN
AS VIEWED FROM THE COMPONENT SIDE

F[D,V]E
MDE

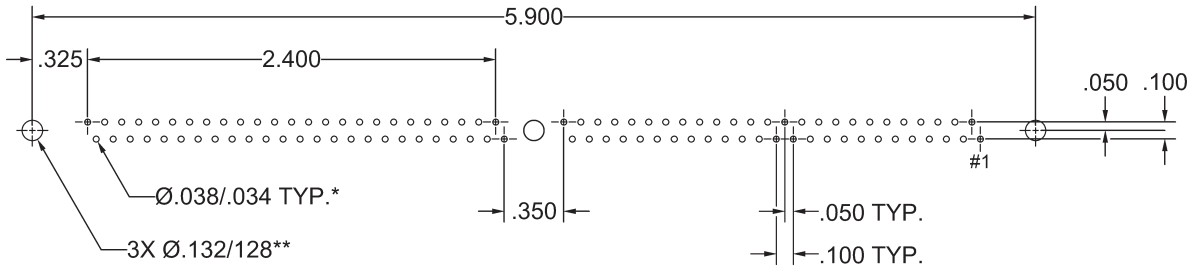

FEE

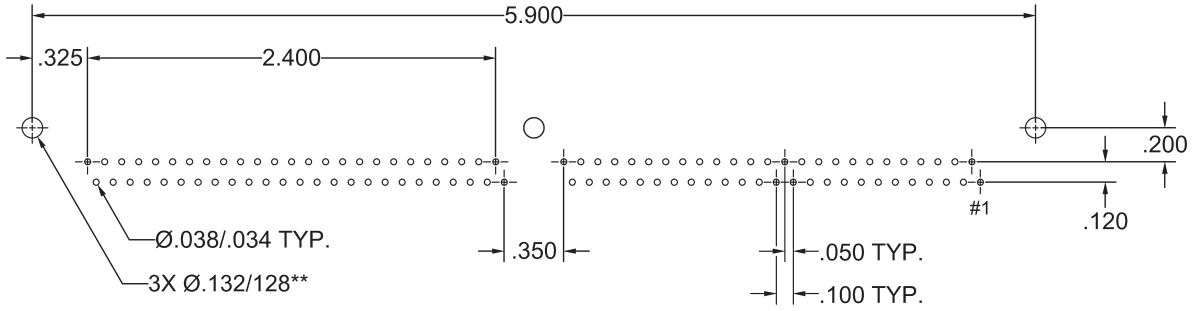

FRE

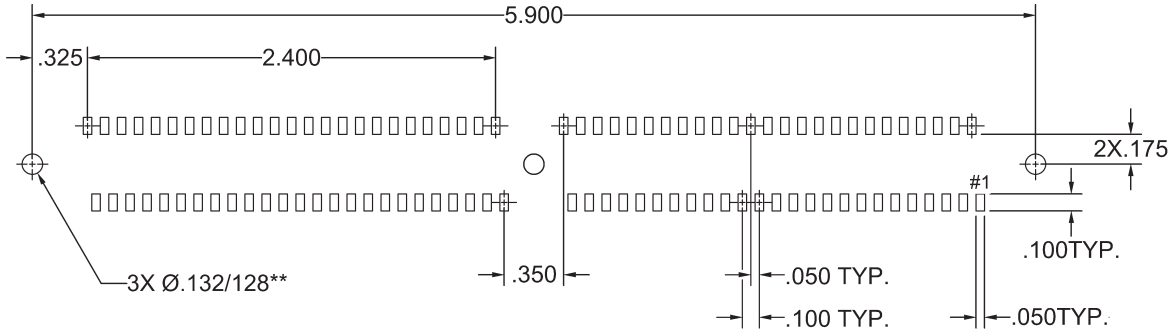

*.042/.038 RECOMMENDED HOLE SIZE FOR COMPLIANT TERMINATION STYLE CONTACTS.. FOR ALL OTHERS, HOLE SIZE SUBJECT TO USER MODIFICATION FOR APPLICATION OR ALTERNATIVE STANDARDS.

**RECOMMENDATION. MAY BE MODIFIED FOR APPLICATION OR ALTERNATIVE STANDARDS.

PWB PATTERN - 2 ROW
100, PLUG PATTERN
AS VIEWED FROM THE COMPONENT SIDE

MEE

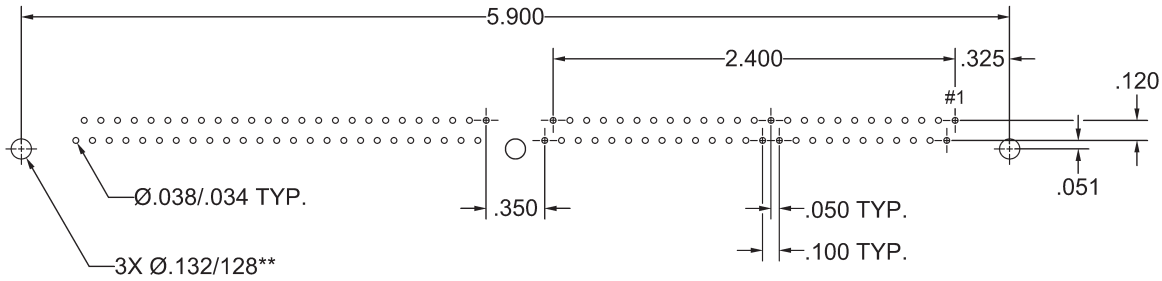

S[D,V]E
P[D,V]E

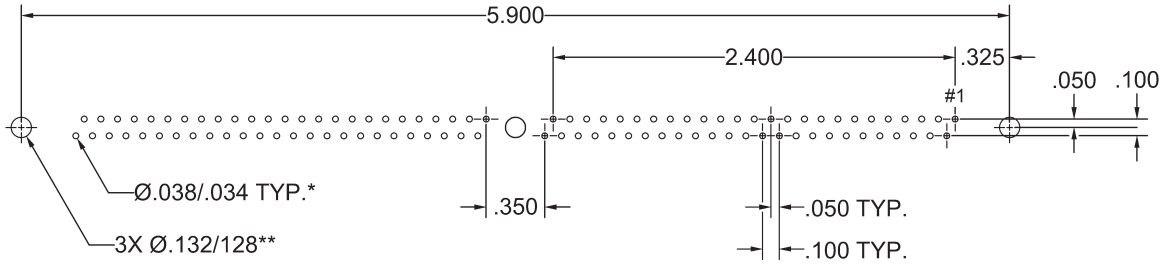

*.042/.038 RECOMMENDED HOLE SIZE FOR COMPLIANT TERMINATION STYLE CONTACTS. FOR ALL OTHERS, HOLE SIZE SUBJECT TO USER MODIFICATION FOR APPLICATION OR ALTERNATIVE STANDARDS.

**RECOMMENDATION. MAY BE MODIFIED FOR APPLICATION OR ALTERNATIVE STANDARDS.

PWB PATTERN - 2 ROW
120, RECEPTACLE PATTERN
AS VIEWED FROM THE COMPONENT SIDE

F[D,V]E

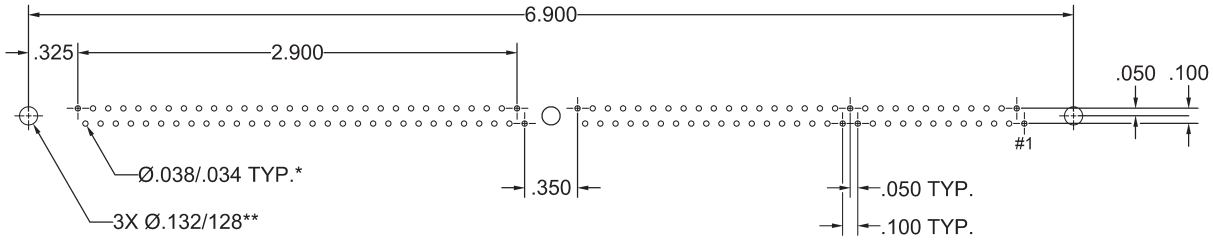

FEE

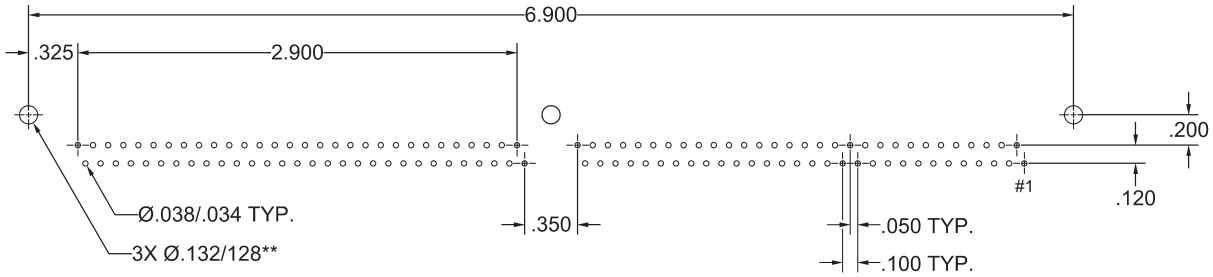

FRE

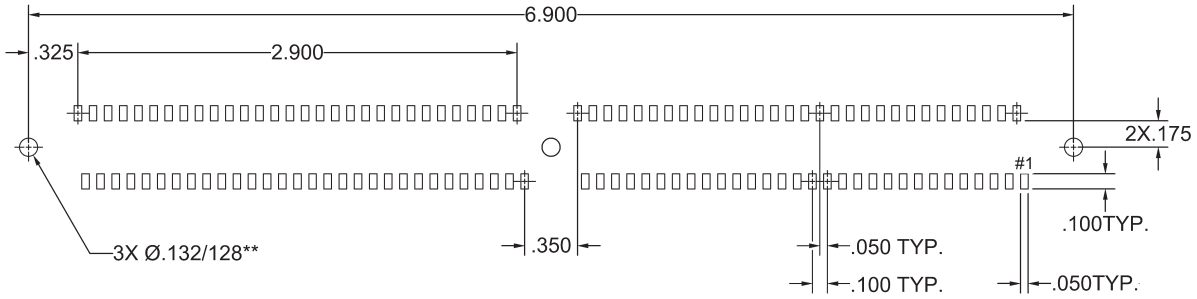

*.042/.038 RECOMMENDED HOLE SIZE FOR COMPLIANT TERMINATION STYLE CONTACTS.. FOR ALL OTHERS, HOLE SIZE SUBJECT TO USER MODIFICATION FOR APPLICATION OR ALTERNATIVE STANDARDS.

**RECOMMENDATION. MAY BE MODIFIED FOR APPLICATION OR ALTERNATIVE STANDARDS.

PWB PATTERN - 2 ROW
120, PLUG PATTERN
AS VIEWED FROM THE COMPONENT SIDE

MEE

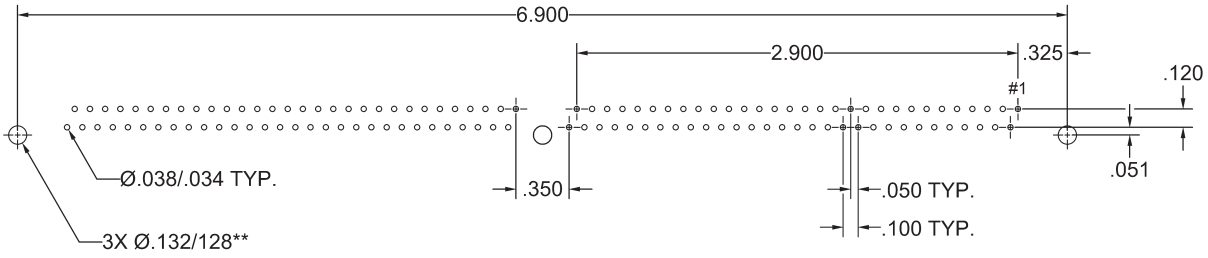

RDE

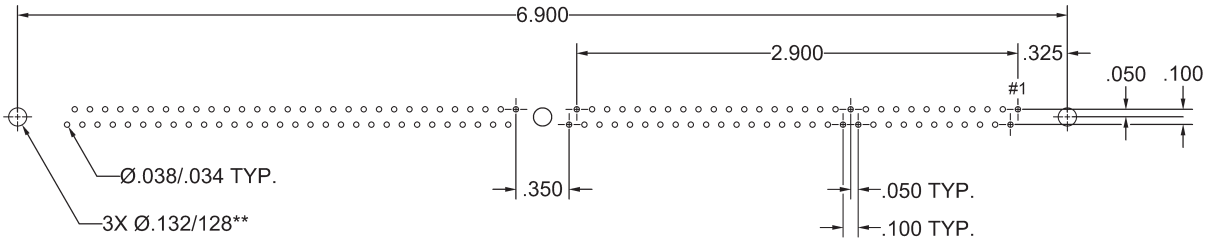

**RECOMMENDATION. MAY BE MODIFIED FOR APPLICATION OR ALTERNATIVE STANDARDS.

PWB PATTERN - 3 ROW
050-104
AS VIEWED FROM THE COMPONENT SIDE

F[A,D,V]E
M[D,V]E

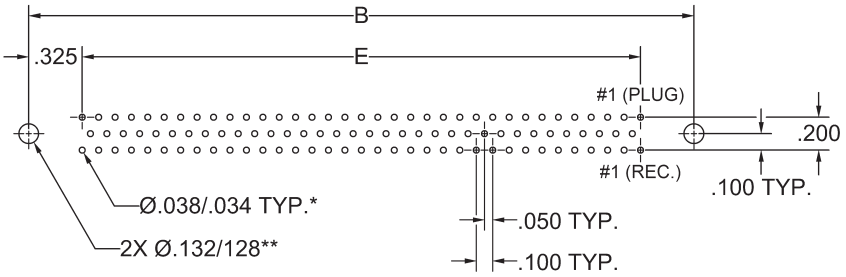

FEE

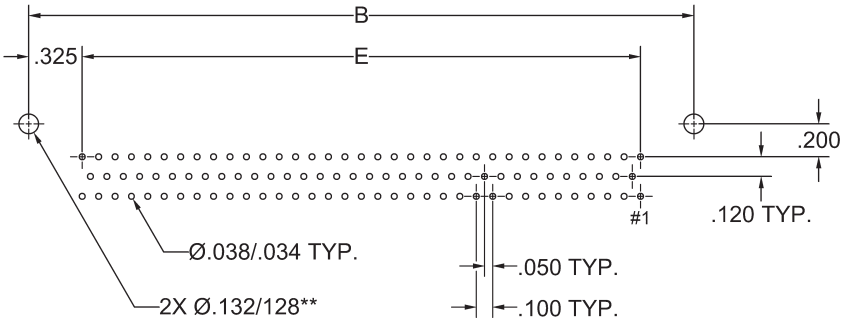

M[E,L]E

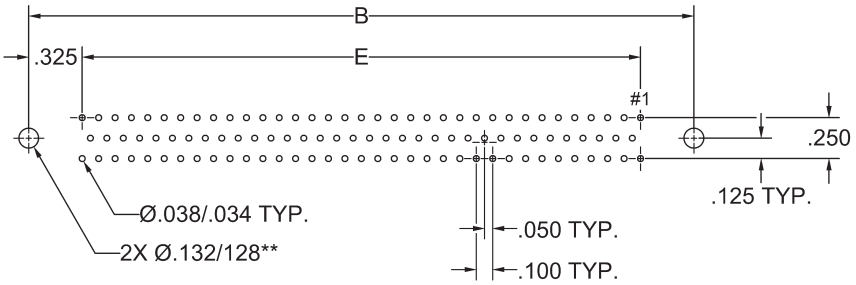

*.042/.038 RECOMMENDED HOLE SIZE FOR COMPLIANT TERMINATION STYLE CONTACTS.. FOR ALL OTHERS, HOLE SIZE SUBJECT TO USER MODIFICATION FOR APPLICATION OR ALTERNATIVE STANDARDS.

**RECOMMENDATION. MAY BE MODIFIED FOR APPLICATION OR ALTERNATIVE STANDARDS.

PWB PATTERN - 3 ROW
122
AS VIEWED FROM THE COMPONENT SIDE

F[A,D,V]E
M[D,V]E

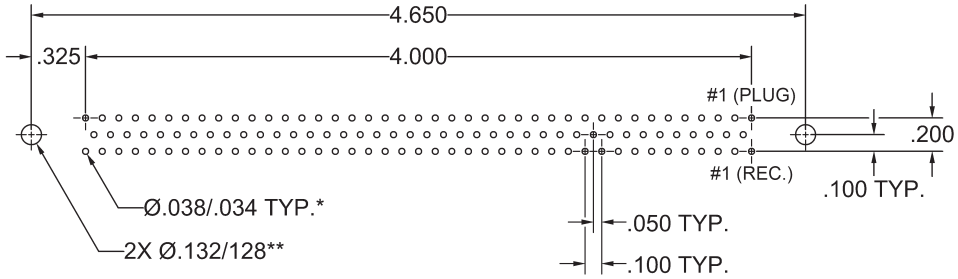

FEE

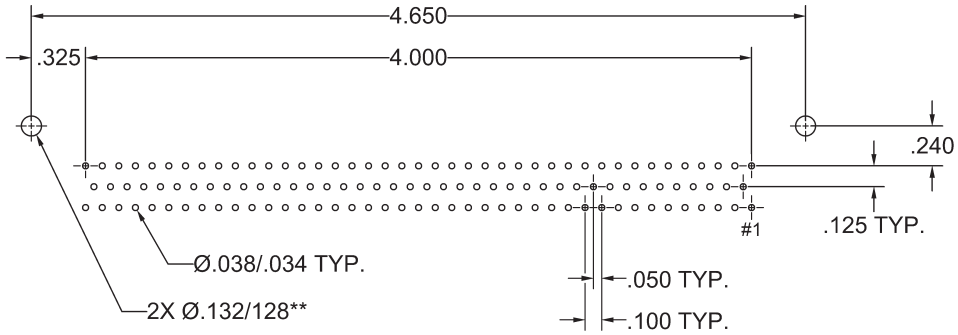

M[E,L]E

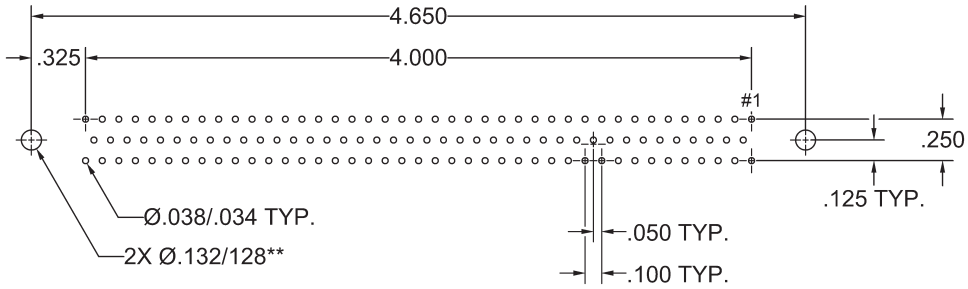

*.042/.038 RECOMMENDED HOLE SIZE FOR COMPLIANT TERMINATION STYLE CONTACTS. FOR ALL OTHERS, HOLE SIZE SUBJECT TO USER MODIFICATION FOR APPLICATION OR ALTERNATIVE STANDARDS.

**RECOMMENDATION. MAY BE MODIFIED FOR APPLICATION OR ALTERNATIVE STANDARDS.

PWB PATTERN - 3 ROW
160
AS VIEWED FROM THE COMPONENT SIDE

F[A,D,V]E
M[D,V]E

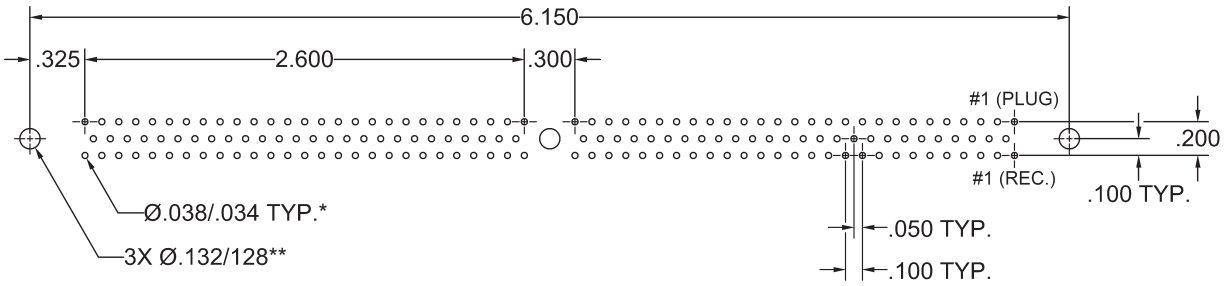

FEE

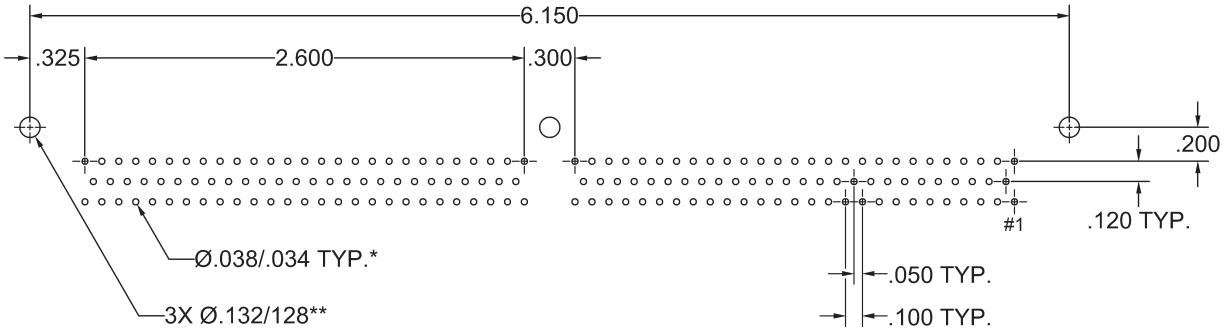

M[E,L]E

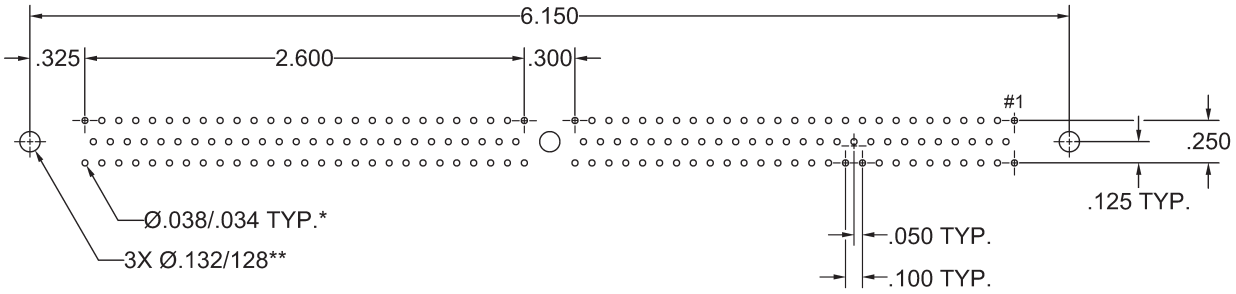

*.042/.038 RECOMMENDED HOLE SIZE FOR COMPLIANT TERMINATION STYLE CONTACTS.. FOR ALL OTHERS, HOLE SIZE SUBJECT TO USER MODIFICATION FOR APPLICATION OR ALTERNATIVE STANDARDS.

**RECOMMENDATION. MAY BE MODIFIED FOR APPLICATION OR ALTERNATIVE STANDARDS.

PWB PATTERN - 3 ROW
208
AS VIEWED FROM THE COMPONENT SIDE

F[A,D,V]E
M[D,V]E

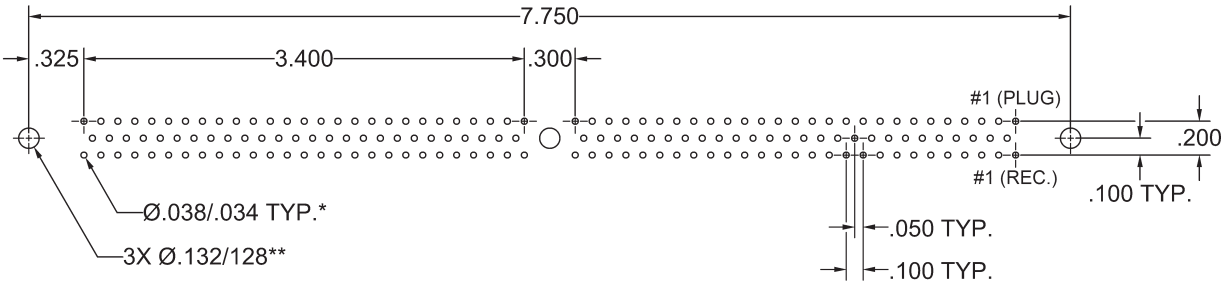

FEE

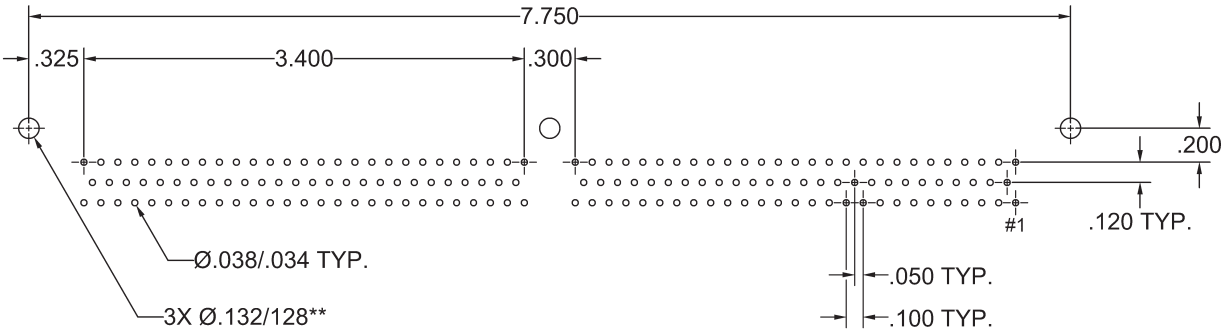

M[E,L]E

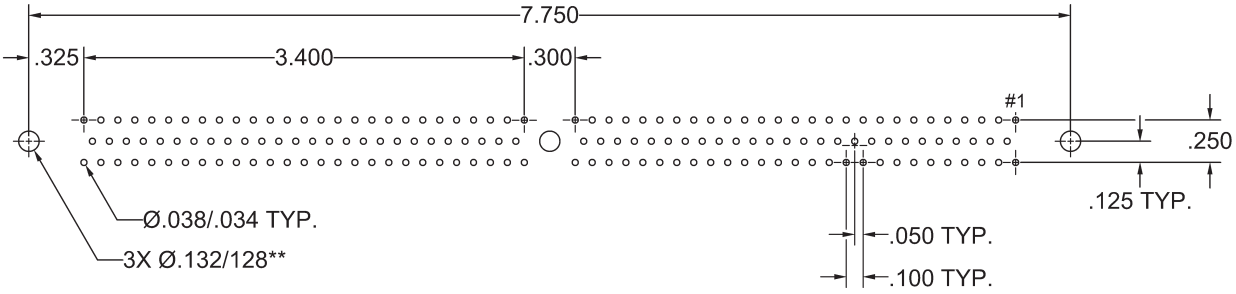

*.042/.038 RECOMMENDED HOLE SIZE FOR COMPLIANT TERMINATION STYLE CONTACTS. FOR ALL OTHERS, HOLE SIZE SUBJECT TO USER MODIFICATION FOR APPLICATION OR ALTERNATIVE STANDARDS.

**RECOMMENDATION. MAY BE MODIFIED FOR APPLICATION OR ALTERNATIVE STANDARDS.

IEH CORPORATION

140 58TH STREET, 8E, BROOKLYN, NY 11220

PHONE (718) 492-4448 • FAX (718) 492-9898

www.iehcorp.com • ieh@iehcorp.com