Amphenol LTD
MILITARY & AEROSPACE

RHINO 38999

High Power Connector Series

RHINO 38999

High Power Connector Series

Amphenol Ltd combines the benefits of field proven Mil-DTL-38999 Series III circular connectors with hyperbolic contacts that extend the boundaries of high power connector technology. Designed to meet the latest military and industrial specifications and stringent safety requirements, Rhino 38999 connectors are being utilised across a wide range of critical power applications.

Amphenol is the foremost manufacturer of both connectors and interconnect systems specifically for applications within military, aerospace and industrial markets.

As such, Amphenol has recognised a distinct trend towards increasing power and voltage requirements within a range of applications including military and electric drive vehicles, aircraft handling and military base station installations.

High reliability applications including vehicular, aerospace, industrial, automation, mining, offshore and other harsh environments can all be addressed using the Rhino 38999 which is derived from the standard MIL-DTL-38999 series originally designed by Amphenol. Critical features of this series including six unique keyways, an anti-decoupling mechanism, superior EMI performance, Tri-Start thread, 500 hrs Salt Spray endurance, GVA Compliance and high vibration tolerance.

The modular, easy to install Rhino 38999 Series of connectors provide IP2X finger protection on both plugs and receptacles in addition to being fully IP69K sealed against ingress of dust and moisture. Flange Mount, Jam Nut or Inline standard connections with either straight or right angled EMC backshells are offered with single pole, high reliability, low contact resistance RADSOK® contacts giving durability beyond 500 mating cycles.

The use of RADSOK® contacts creates an electrical interface that exceeds typical interconnect requirements via a hyperbolic socket contact construction. RADSOK® distributes normal forces over a high percentage of the mating surface to ensure a smooth and even engagement force with exceptionally high performance under vibration.

Rhino 38999 connectors are available in a variety of shell materials including Aluminium Alloy, Titanium, Stainless Steel and Aluminium Bronze; in a variety of plating finishes including Amphenol's environmental award winning RoHS compliant Black Zinc Nickel, Electroless Nickel and Olive Drab Cadmium; and equipped with a variety of contact termination styles including crimp, busbar and lug termination. In addition, Amphenol is able to offer a full range of custom configurations to allow breakaway, through-bulkhead or push-pull functionality.

Amphenol also offers a full design and manufacturing service utilising standard Rhino 38999 connectors in traditionally built cable harnesses or low-profile overmoulded configurations up to 1000A capacity.

Amphenol LTD
MILITARY & AEROSPACE

Contents

Rhino 38999 terminology 4
Rhino 38999 backshell options 5
Rhino 38999 mating options 5
Rhino 38999 part numbering 6
Rhino 38999 performance information 7
Rhino 38999 keyway orientations 8
Rhino 38999 backshell exit-angle 8
Rhino 38999 contact information chart 9
Rhino 38999 de-rating chart 9
Rhino 38999 crimp contact chart 10

Plugs

Table of styles 11
06 Inline Plug – Locking Ring Only, Crimp Termination 12
06 Inline Plug – Locking Ring Only, Threaded Post Termination 13
06 Inline Plug – Locking Ring Only, Flat Tail Termination 14
06 Inline Plug – Locking Ring Only, Tapped Hole Termination 15
06 Inline Plug – Straight Backshell, Crimp Termination 16
06 Inline Plug – 90˚ Backshell, Crimp Termination 17

Receptacles

Table of styles 18
00 Wall Mount Receptacle – Locking Ring Only, Crimp Termination 20
00 Wall Mount Receptacle – Locking Ring Only, Threaded Post Termination 21
00 Wall Mount Receptacle – Locking Ring Only, Flat Tail Termination 22
00 Wall Mount Receptacle – Locking Ring Only, Tapped Hole Termination 23
00 Wall Mount Receptacle – Straight Backshell, Crimp Termination 24
00 Wall Mount Receptacle – 90˚ Backshell, Crimp Termination 25
01 Inline Receptacle – Locking Ring Only, Crimp Termination 26
01 Inline Receptacle – Locking Ring Only, Threaded Post Termination 27
01 Inline Receptacle – Locking Ring Only, Flat Tail Termination 28
01 Inline Receptacle – Locking Ring Only, Tapped Hole Termination 29
01 Inline Receptacle – Straight Backshell, Crimp Termination 30
01 Inline Receptacle – 90˚ Backshell, Crimp Termination 31
07 Jam Nut Receptacle – Locking Ring Only, Crimp Termination 32
07 Jam Nut Receptacle – Locking Ring Only, Threaded Post Termination 33
07 Jam Nut Receptacle – Locking Ring Only, Flat Tail Termination 34
07 Jam Nut Receptacle – Locking Ring Only, Tapped Hole Termination 35
07 Jam Nut Receptacle – Straight Backshell, Crimp Termination 36
07 Jam Nut Receptacle – 90˚ Backshell, Crimp Termination 37

Accessories

Table of styles 38
Cap assembly part numbering 39
PC Metal cap assembly for plugs 40
PC-LZ Polymer cap assembly for plugs 41
RC Metal cap assembly for receptacles 42
RC-LZ Polymer cap assembly for receptacles 43

Installation

Guide to installation instructions 44
Panel cutout data 45
Backshell dimensions 46
Tooling 47
Torque fixtures 48
Castellated panel nut 48

Range extensions 49

Rhino 38999 terminology

Amphenol LTD
MILITARY & AEROSPACE

Rhino 38999 backshell options

Locking ring only

Straight backshell

90˚ backshell

Rhino 38999 mating options

WPTV-06XXXX-XXX-XX

Plug

WPTV-00XXXX-XXX-XX

Receptacle – Wall mount style

WPTV-01XXXX-XXX-XX

Receptacle – In-line style

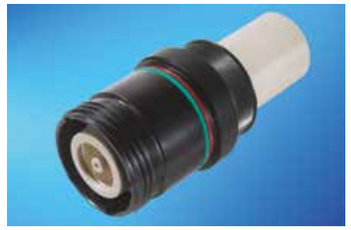

WPTV-07XXXX-XXX-XX

Receptacle – Jam nut style

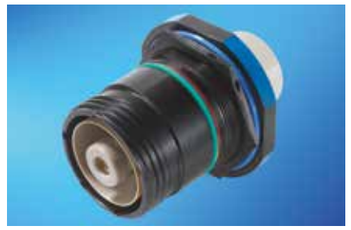

Rhino 38999 part numbering

Example: WPTV – 06 ZN 25 – 1000 – 6 P N B

(W587) = castellated nut for jam nut connectors used in space constraint
(W638) = to denote sealing gasket supplied with wall-mount connectors
(W52) = Aluminium, Olive Drab Zinc Cobalt plating

WPTV-	XX	XX	XX-	XXXX-	X	X	X	X
Series identifier	**Style** 00 = Wall mount receptacle 01 = In-line receptacle 06 = In-line plug 07 = Jam nut receptacle	**Material and finish** ZN = Aluminium, Black Zinc Nickel RW = Aluminium, Cad Olive Drab (not RoHS) RF = Aluminium, Electroless Nickel SS = Stainless Steel* RB = Aluminium Bronze*	**Shell size** 13 15 17 21 23 25	**Amperage rating at 40˚C** 85 120 185 340 500 1000	**Contact termination** 1 = Standard crimp 2 = Threaded post 3 = Flat tail with cross hole 5 = Tapped hole with locking flats 6,7,8, = Reduced crimp barrel options, see page 10	**Contact gender** P = Pin S = Socket	**Key orientation** N A B C D E	**Accessory style** A = Locking ring with lip for heatshrink boot B = Straight EMC backshell C = 90˚ EMC backshell

*Consult factory for availability

Part number example

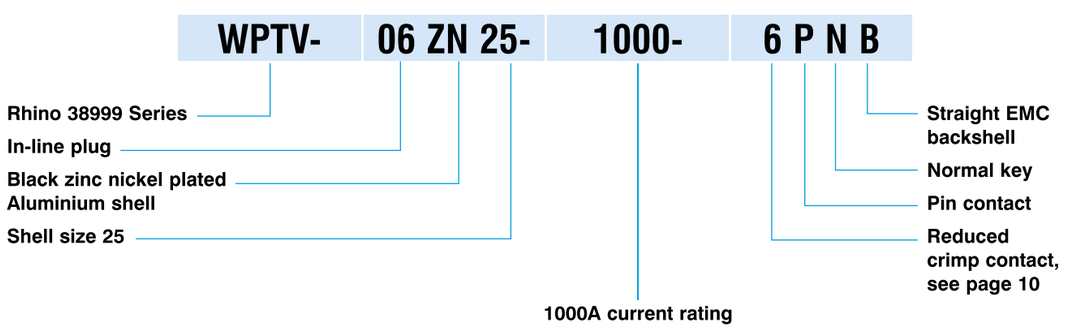

Amphenol LTD
MILITARY & AEROSPACE

Rhino 38999 performance information

Test Parameter	Description
Electrical	
Current Rating	Up to 1000A, see page 9 for de-rating information
Shell to Shell Continuity	Less than 2.50mΩ initially, in accordance with EIA-364-83
Shell to Backshell Continuity	Less than 5.00mΩ initially, in accordance with EIA-364-83
Contact Resistance	See page 9
Insulation Resistance	5000MΩ
Working Voltage	Size 13 to 15: 500Vac RMS at sea level, 600Vdc at sea level Size 17 to 25: 875Vac RMS at sea level, 1238Vdc at sea level
Dielectric Withstand Voltage	Size 13 to 15: At 1500Vac RMS, 2mA max leakage current in accordance with EIA-364-2 Size 17 to 25: At 2625Vac RMS, 2mA max leakage current in accordance with EIA-364-2
EMI	360˚ screening facilitated with straight or 90˚ EMC backshell
Technical	
Mating Durability	500 cycles minimum, contacts rated to 20,000 cycles
Non-Magnetic	Yes
Termination Style	Crimp, Lug, Bus-bar
Coupling Method	Anti-vibration Tri-start thread
Mating Force	As Per MIL-DTL-38999L Table IV
Backshell Options	Straight, Right Angle or Locking Ring only
Panel Cutouts	As per MIL-DTL-38999L for rear mounting receptacles only
Environmental	
Operating Temperature	–55˚C to +150˚C*
Sealing (Mated and Unmated)	IP69K, 1hr at 2 metres immersion and proof against high pressure steam jet cleaning
Salt Spray	Plating dependant, eg 500hrs for Black Zinc Nickel
Shock and Vibration	In accordance with DEF-STAN 00-35 Iss 4 Ch2 01 test M1 Appendix A Figs A22 – High Level and A23 Low Level**
Impact	In accordance with EIA-364-42 Light Service Class
Fluid Resistance	As per Mil-DTL-38999L
Safety	IP2X Finger Protection in accordance with BS EN 60529 mechanical finger
RoHS Compliant	Yes, unless Olive Drab Cadmium plate is specified

* Including environmental and contact self-heating, see de-rating curve.

** Cables should be supported to provide strain relief as close to the rear of the connector as practical. Bus bars should be kept to a minimum length practical, suitable CSA and appropriately supported for best performance.

Rhino 38999 keyway orientations

A plug with a given orientation letter will mate with a receptacle with the same orientation letter. The angles for a given connector are the same whether it contains a pin or socket contact. Views shown are from front face of the connector.

Shell size	Keyway letter	AR/AP	BR/BP	CR/CP	DR/DP
13 to 15	N	95	141	208	236
	A	113	156	182	292
	B	90	145	195	252
	C	53	156	220	255
	D	119	146	176	298
	E	51	141	184	242
17 to 25	N	80	142	196	293
	A	135	170	200	310
	B	49	169	200	244
	C	66	140	200	257
	D	62	145	180	280
	E	79	153	197	272

Keyway rotation

Receptacle
Keyway orientation

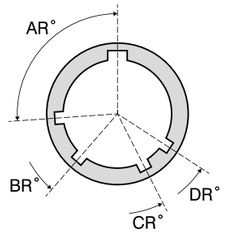

Plug
Key orientation

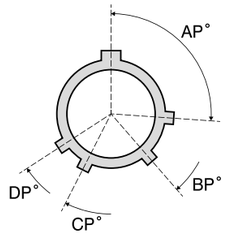

Rhino 38999 backshell exit-angle

A key feature of the Rhino 38999 connectors is the flexibility to select the exit angle of the 90˚backshell at the time of installation. The angle of exit relative to the main keyway can be set in 45 degree increments and is fixed at the time of terminating the connector. This enables adjustments to be made and optimisation of the mounting and cable runs right up until the point of installation.

Castellated teeth on the back end of the connector shell mesh to those of the right-angle backshell and are secured as the contact is fixed in place using the 90˚contact assembly tooling described on page 47.

Rhino 38999 contact information chart

The below table provides supplementary data on electrical properties of the high performance Radsok contacts used in Rhino 38999 connectors.

Shell size	Pin contact size (mm)	Contact resistance (mΩ)	Max current rating* (A) ambient	Contact mating force (N)
13	3.6 mm	0.15	85A	10
15	6.0 mm	0.11	120A	20
17	8.0 mm	0.08	185A	50
21	10.0 mm	0.06	340A	70
23	14.0 mm	0.05	500A	90
25	18.0 mm	0.02	1000A	130

*See chart below for more information

Rhino 38999 de-rating chart

The chart below is intended as a guide only, when used with the stated cable sizes on the plug and receptacle. It is the designer's responsibility to consider all physical and environmental factors which may affect de-rating and specify with some margin within these guideline limits. However Amphenol Ltd welcomes the opportunity to work alongside the designer in selecting appropriate connector solutions.

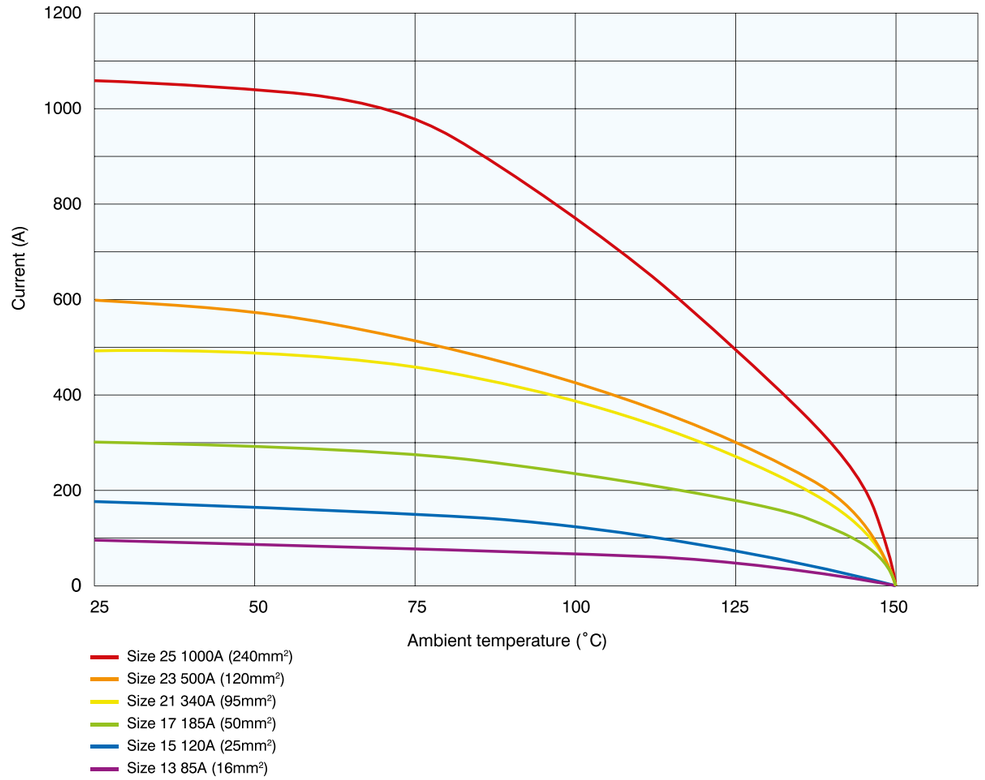

Rhino 38999 crimp contact chart

Rhino 38999 connectors may be terminated to many cable brands including Axon, Habia, Huber+Suhner, Prysmian and TE. Different methods of cable construction can lead to variations in stranding, compactness, tolerances and dimensions beyond our control. Therefore, whilst Amphenol cannot recommend the use of any particular cable type or brand, our Application Engineers are available to offer advice on crimp termination methods depending upon what tooling the Designer has available. The table below is intended as a guide only and it is recommended that crimp and pull-off tests be conducted to verify the contact termination method and tooling ultimately selected by the Designer.

For details of proven crimp tooling and die sets please refer to document 123GB-0846 available on the Amphenol Rhino 38999 website.

Shell size & current rating	Contact termination	Crimp barrel bore ID	Min acceptable cable core OD	Approx cable current rating @ 40°C
13-85	-1	0.230 (05.84)	0.205 (05.20)	185A
	-6	0.191 (04.85)	0.157 (04.00)	140A
	-7	0.154 (03.91)	0.116 (02.95)	100A
15-120	-1	0.317 (08.05)	0.260 (06.60)	250A
	-6	0.230 (05.84)	0.205 (05.20)	185A
17-185	-1	0.423 (10.74)	0.362 (09.20)	395A
	-6	0.364 (09.25)	0.297 (07.55)	310A
21-340	-1	0.585 (14.86)	0.492 (12.50)	600A
	-6	0.498 (12.65)	0.439 (11.15)	500A
	-7	0.423 (10.74)	0.362 (09.20)	395A
23-500	-1	0.673 (17.09)	0.565 (14.35)	715A
	-6	0.585 (14.86)	0.492 (12.50)	600A
	-7	0.498 (12.65)	0.439 (11.15)	500A
	-8	0.423 (10.74)	0.362 (09.20)	395A
25-1000	-6	0.947 (24.05)	0.866 (22.00)	1115A
	-7	0.829 (21.06)	0.748 (19.00)	920A
	-8	0.752 (19.10)	0.669 (17.00)	810A
	-9	0.673 (17.09)	0.565 (14.35)	715A

Amphenol LTD
MILITARY & AEROSPACE

Plugs – table of styles

WPTV-06
A style
Page 12

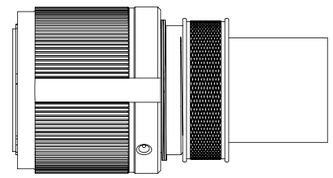

WPTV-06
B style
Page 16

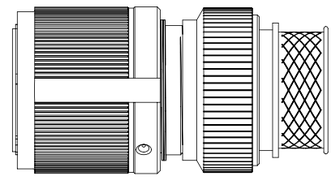

WPTV-06
C style
Page 17

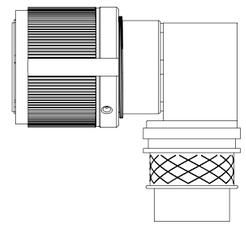

Plug

WPTV-**06**XXXX-XXXX-**1**XX**A**, also **-6**, **-7**, and **-8** reduced crimp options

- Inline Plug – Locking Ring Only, Crimp Termination

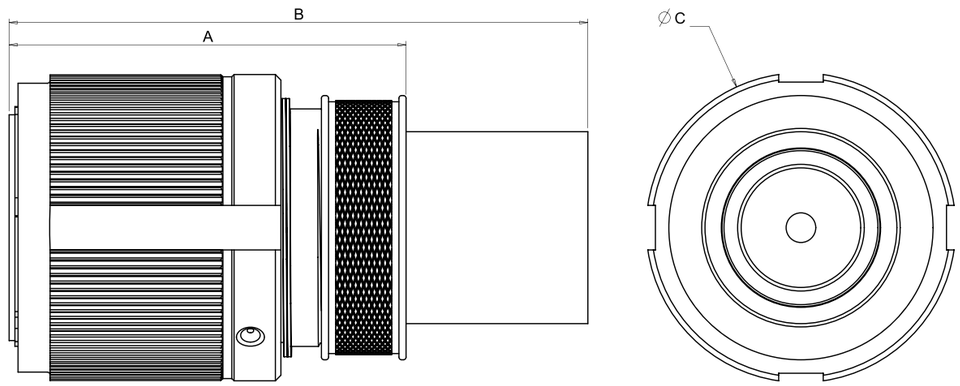

Shell Size	A	B	ØC
Size 13	1.529 (38.84)	1.819 (46.20)	1.121 (28.47)
Size 15	1.754 (44.55)	2.114 (53.70)	1.249 (31.72)
Size 17	1.868 (47.45)	2.378 (60.40)	1.386 (35.20)
Size 21	2.023 (51.38)	2.587 (65.71)	1.620 (41.15)
Size 23	2.228 (56.59)	3.249 (85.52)	1.737 (44.12)
Size 25	2.475 (62.87)	4.072 (103.43)	1.864 (47.35)

All dimensions are in inches (mm shown in brackets) and are for reference only. Figure not to scale.

Amphenol LTD
MILITARY & AEROSPACE

Plugs

Plug

WPTV-**06**XXXX-XXXX-**2**XX**A**

- Inline Plug – Locking Ring Only, Threaded Post Termination

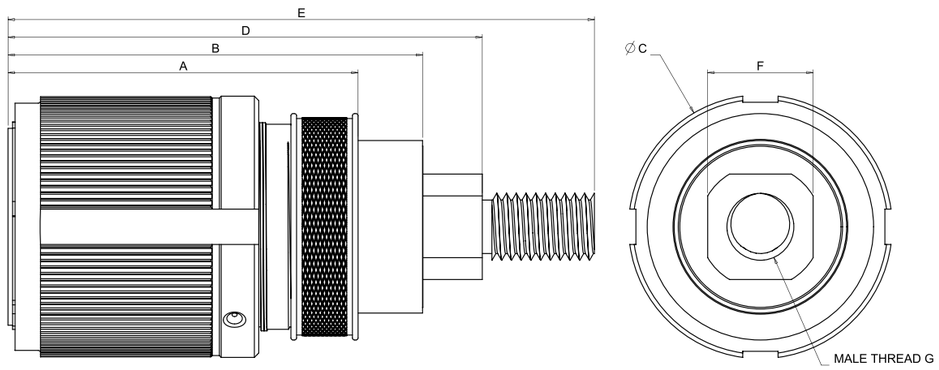

Shell Size	A	B	ØC	D	E	F	Thread G
Size 13	1.529 (38.84)	1.869 (47.47)	1.121 (28.47)	2.070 (52.58)	2.548 (64.72)	0.274 (6.96)	M4
Size 15	1.754 (44.55)	2.093 (53.16)	1.249 (31.72)	2.294 (58.27)	2.772 (70.41)	0.392 (9.96)	M6
Size 17	1.868 (47.45)	2.208 (56.08)	1.386 (35.20)	2.473 (62.81)	3.070 (77.98)	0.510 (12.95)	M8
Size 21	2.023 (51.38)	2.480 (62.99)	1.620 (41.15)	2.808 (71.32)	3.523 (89.48)	0.667 (16.94)	M10
Size 23	2.228 (56.59)	2.685 (68.20)	1.737 (44.12)	3.107 (78.92)	3.900 (99.06)	0.746 (18.95)	M12
Size 25	2.475 (62.87)	2.932 (74.47)	1.864 (47.35)	3.355 (85.22)	4.148 (105.36)	0.746 (18.95)	M12

All dimensions are in inches (mm shown in brackets) and are for reference only. Figure not to scale.

Plug

WPTV-**06**XXXX-XXXX-**3**XX**A**

- Inline Plug – Locking Ring Only, Flat Tail Termination

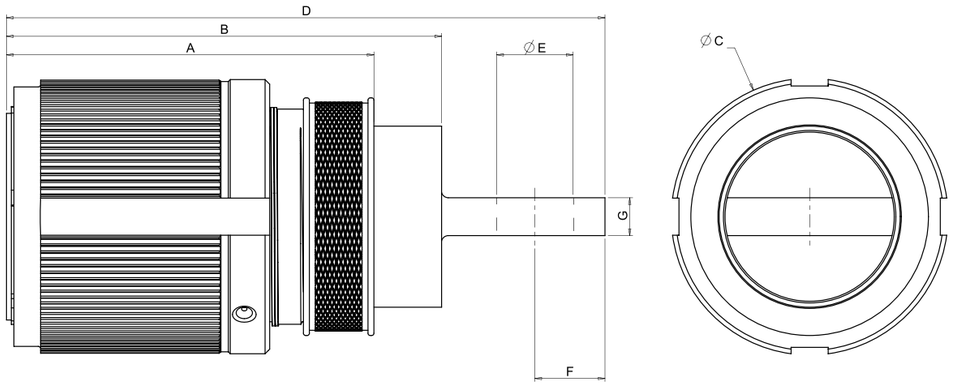

Shell Size	A	B	ØC	D	ØE	F	G
Size 13	1.529 (38.84)	1.869 (47.47)	1.121 (28.47)	2.814 (71.48)	0.200 (5.08)	0.433 (11.00)	0.145 (3.68)
Size 15	1.754 (44.55)	2.093 (53.16)	1.249 (31.72)	3.038 (77.16)	0.279 (7.09)	0.433 (11.00)	0.145 (3.68)
Size 17	1.868 (47.45)	2.208 (56.08)	1.386 (35.20)	3.153 (80.09)	0.358 (9.09)	0.433 (11.00)	0.205 (5.21)
Size 21	2.023 (51.38)	2.480 (62.99)	1.620 (41.15)	3.424 (86.97)	0.436 (11.07)	0.433 (11.00)	0.205 (5.21)
Size 23	2.228 (56.59)	2.685 (68.20)	1.737 (44.12)	3.785 (96.14)	0.515 (13.08)	0.472 (11.99)	0.255 (6.48)
Size 25	2.475 (62.87)	2.932 (74.47)	1.864 (47.35)	4.033 (102.44)	0.515 (13.08)	0.472 (11.99)	0.255 (6.48)

All dimensions are in inches (mm shown in brackets) and are for reference only. Figure not to scale.

Amphenol LTD
MILITARY & AEROSPACE

Plugs

Plug

WPTV-**06**XXXX-XXXX-**5**XX**A**

- Inline Plug – Locking Ring Only, Tapped Hole Termination

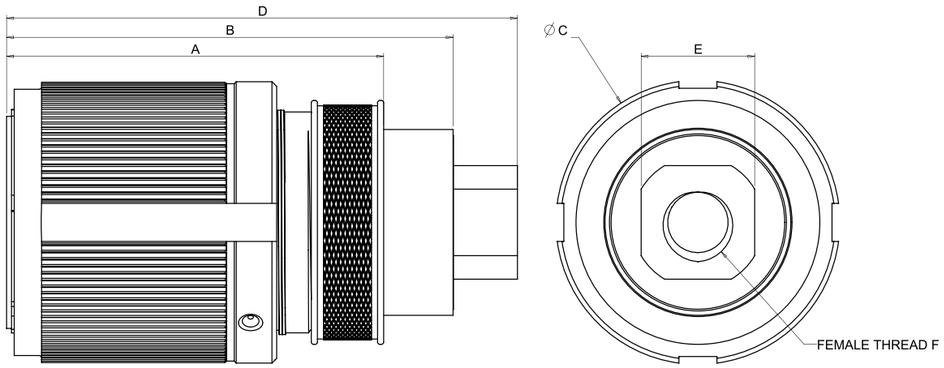

Shell Size	A	B	ØC	D	E	Thread F
Size 13	1.529 (38.84)	1.869 (47.47)	1.121 (28.47)	2.070 (52.58)	0.274 (6.96)	M4 x 12mm deep
Size 15	1.754 (44.55)	2.093 (53.16)	1.249 (31.72)	2.294 (58.27)	0.392 (9.96)	M6 x 12mm deep
Size 17	1.868 (47.45)	2.208 (56.08)	1.386 (35.20)	2.473 (62.81)	0.510 (12.95)	M8 x 15mm deep
Size 21	2.023 (51.38)	2.480 (62.99)	1.620 (41.15)	2.808 (71.32)	0.667 (16.94)	M10 x 18mm deep
Size 23	2.228 (56.59)	2.685 (68.20)	1.737 (44.12)	3.107 (78.92)	0.746 (18.95)	M12 x 18mm deep
Size 25	2.475 (62.87)	2.932 (74.47)	1.864 (47.35)	3.355 (85.22)	0.746 (18.95)	M12 x 18mm deep

All dimensions are in inches (mm shown in brackets) and are for reference only. Figure not to scale.

Plug

WPTV-**06**XXXX-XXXX-**1**XX**B**, also **-6**, **-7**, and **-8** and reduced crimp options

- Inline Plug – Straight Backshell, Crimp Termination

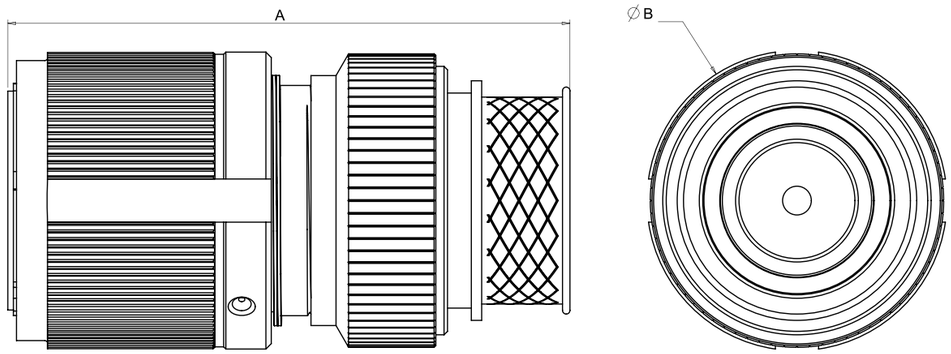

Shell Size	A	ØB
Size 13	2.556 (64.92)	1.121 (28.47)
Size 15	2.781 (70.64)	1.249 (31.72)
Size 17	2.895 (73.53)	1.386 (35.20)
Size 21	3.050 (77.47)	1.620 (41.15)
Size 23	3.255 (82.68)	1.737 (44.12)
Size 25	4.055 (103.00)	1.864 (47.35)

All dimensions are in inches (mm shown in brackets) and are for reference only. Figure not to scale.

Amphenol LTD
MILITARY & AEROSPACE

Plugs

Plug

WPTV-**06**XXXX-XXXX-**1**XX**C**, also **-6**, **-7**, and **-8** reduced crimp options

- Inline Plug – 90˚ Backshell, Crimp Termination

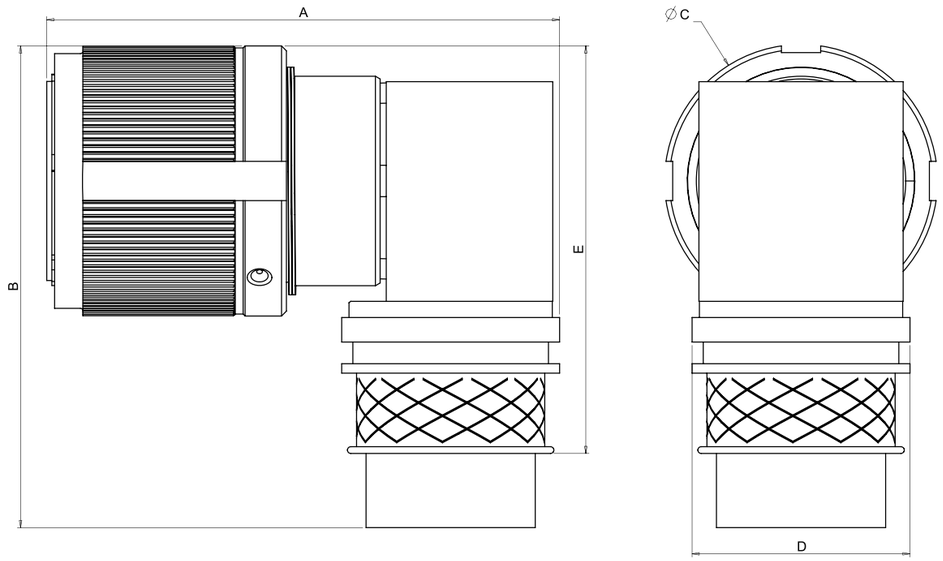

Shell Size	A	B	ØC	D	E
Size 13	2.139 (54.33)	2.343 (59.51)	1.121 (28.47)	0.782 (19.86)	1.832 (46.53)
Size 15	2.476 (62.89)	2.453 (62.31)	1.249 (31.72)	0.940 (23.88)	1.984 (50.39)
Size 17	2.689 (68.30)	2.569 (65.25)	1.386 (35.20)	1.033 (26.24)	2.131 (54.13)
Size 21	2.888 (73.36)	2.929 (74.40)	1.620 (41.15)	1.263 (32.08)	2.248 (57.10)
Size 23	3.265 (82.93)	3.051 (77.50)	1.737 (44.12)	1.387 (35.23)	2.368 (60.15)
Size 25	3.772 (95.81)	3.676 (93.37)	1.864 (47.35)	1.726 (43.84)	2.808 (71.32)

See page 47 for necessary 90° contact assembly tooling.
All dimensions are in inches (mm shown in brackets) and are for reference only. Figure not to scale.

Receptacles – table of styles

WPTV-00
A style
Page 20

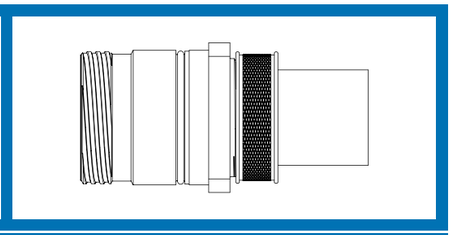

WPTV-00
B style
Page 24

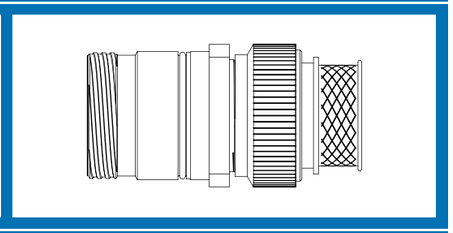

WPTV-00
C style
Page 25

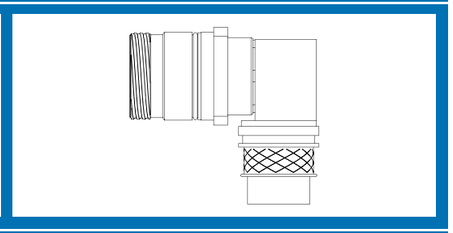

WPTV-01
A style
Page 26

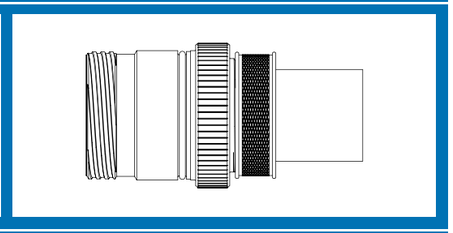

WPTV-01
B style
Page 30

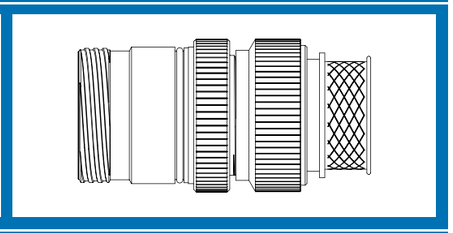

WPTV-01
C style
Page 31

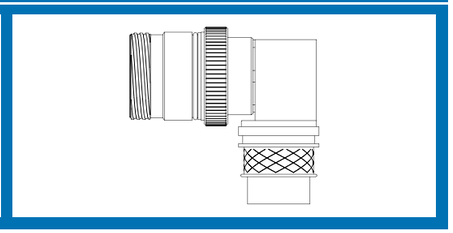

Amphenol LTD
MILITARY & AEROSPACE

Receptacles – table of styles

Receptacles – table of styles

WPTV-07
A style
Page 32

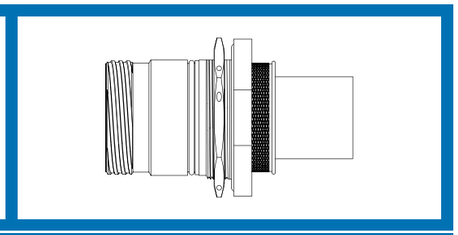

WPTV-07
B style
Page 36

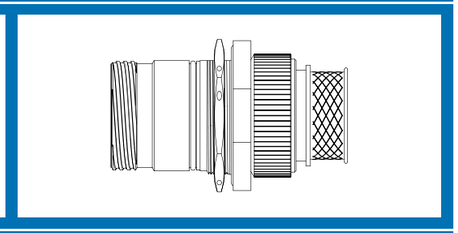

WPTV-07
C style
Page 37

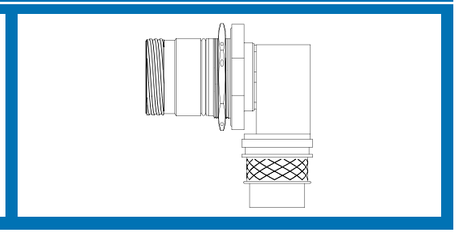

Receptacle

WPTV-**00**XXXX-XXXX-**1**XX**A**, also **-6**, **-7**, and **-8** reduced crimp options

- Wall Mount Receptacle – Locking Ring Only, Crimp Termination

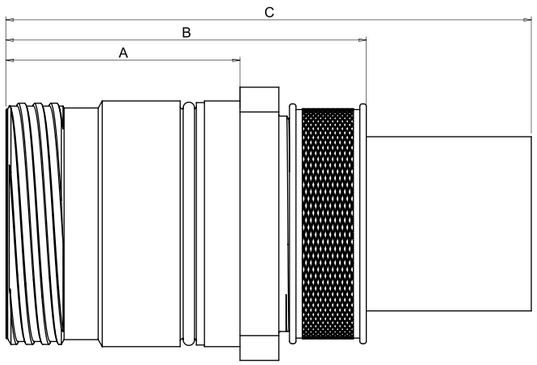

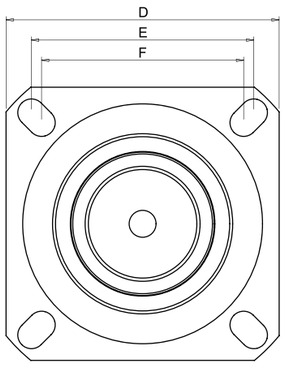

Shell size	A	B	C	D	E	F
Size 13	0.868 (22.05)	1.529 (38.84)	1.819 (46.20)	1.125 (28.58)	0.906 (23.01)	0.812 (20.62)
Size 15	1.093 (27.76)	1.754 (44.55)	2.114 (53.70)	1.219 (30.96)	0.969 (24.61)	0.906 (23.01)
Size 17	1.207 (30.66)	1.868 (47.45)	2.378 (60.40)	1.312 (33.32)	1.062 (26.97)	0.969 (24.61)
Size 21	1.362 (34.59)	2.023 (51.38)	2.587 (65.71)	1.562 (39.67)	1.250 (31.75)	1.156 (29.36)
Size 23	1.447 (36.75)	2.228 (56.59)	3.249 (85.52)	1.689 (42.90)	1.375 (34.93)	1.250 (31.75)
Size 25	1.694 (43.03)	2.475 (62.87)	4.052 (102.92)	1.812 (46.02)	1.500 (38.10)	1.375 (34.93)

Use (W638) = to denote sealing gasket supplied with wall-mount connectors.
All dimensions are in inches (mm shown in brackets) and are for reference only. Figure not to scale.

Amphenol LTD
MILITARY & AEROSPACE

Receptacles

Receptacle

WPTV-**00**XXXX-XXXX-**2**XX**A**, also **-6**, **-7**, and **-8** reduced crimp options

- Wall Mount Receptacle – Locking Ring Only, Threaded Post Termination

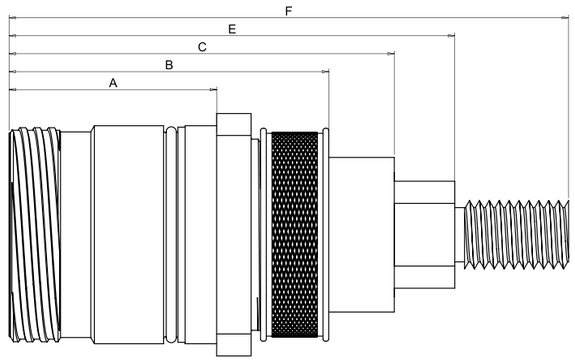

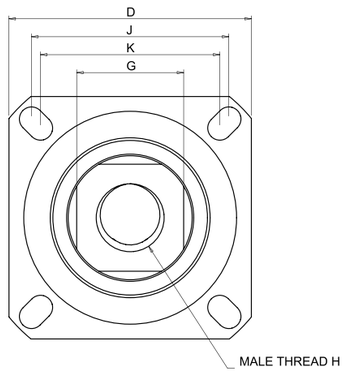

Shell Size	A	B	C	D	E	F	G	Thread H	J	K
Size 13	0.868 (22.05)	1.529 (38.84)	1.869 (47.47)	1.125 (28.58)	2.070 (52.58)	2.548 (64.72)	0.274 (6.96)	M4	0.906 (23.01)	0.812 (20.62)
Size 15	1.093 (27.76)	1.754 (44.55)	2.093 (53.16)	1.219 (30.96)	2.294 (58.27)	2.772 (70.41)	0.392 (9.96)	M6	0.969 (24.61)	0.906 (23.01)
Size 17	1.207 (30.66)	1.868 (47.45)	2.208 (56.08)	1.312 (33.32)	2.473 (62.81)	3.070 (77.98)	0.510 (12.95)	M8	1.062 (26.97)	0.969 (24.61)
Size 21	1.362 (34.59)	2.023 (51.38)	2.480 (62.99)	1.562 (39.67)	2.808 (71.32)	3.523 (89.48)	0.667 (16.94)	M10	1.250 (31.75)	1.156 (29.36)
Size 23	1.447 (36.75)	2.228 (56.59)	2.685 (68.20)	1.689 (42.90)	3.107 (78.92)	3.900 (99.06)	0.746 (18.95)	M12	1.375 (34.93)	1.250 (31.75)
Size 25	1.694 (43.03)	2.475 (62.87)	2.932 (74.47)	1.812 (46.02)	3.355 (85.22)	4.148 (105.36)	0.746 (18.95)	M12	1.500 (38.10)	1.375 (34.93)

Use (W638) = to denote sealing gasket supplied with wall-mount connectors.
All dimensions are in inches (mm shown in brackets) and are for reference only. Figure not to scale.

Receptacle

WPTV-**00**XXXX-XXXX-**3**XX**A**

- Wall Mount Receptacle – Locking Ring Only, Flat Tail Termination

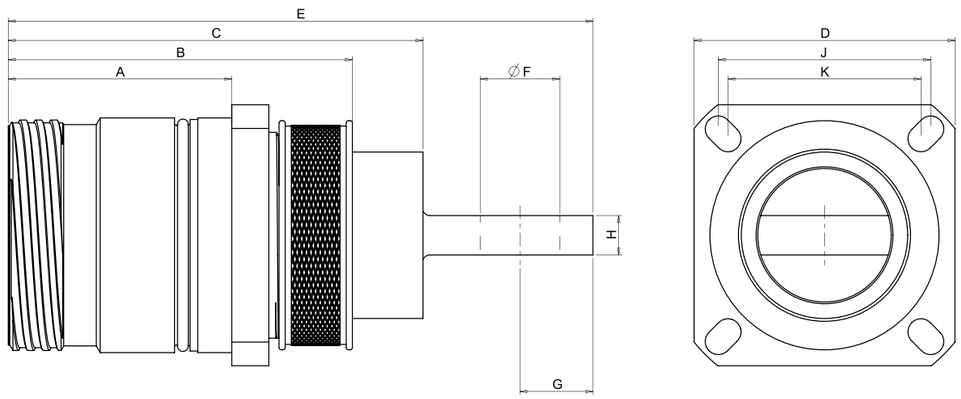

Shell size	A	B	C	D	E	ØF	G	H	J	K
Size 13	0.868 (22.05)	1.529 (38.84)	1.869 (47.47)	1.125 (28.58)	2.814 (71.48)	0.200 (5.08)	0.433 (11.00)	0.145 (3.68)	0.906 (23.01)	0.812 (20.62)
Size 15	1.093 (27.76)	1.754 (44.55)	2.093 (53.16)	1.219 (30.96)	3.038 (77.16)	0.279 (7.09)	0.433 (11.00)	0.145 (3.68)	0.969 (24.61)	0.906 (23.01)
Size 17	1.207 (30.66)	1.868 (47.45)	2.208 (56.08)	1.312 (33.32)	3.153 (80.09)	0.358 (9.09)	0.433 (11.00)	0.205 (5.21)	1.062 (26.97)	0.969 (24.61)
Size 21	1.362 (34.59)	2.023 (51.38)	2.480 (62.99)	1.562 (39.67)	3.424 (86.97)	0.436 (11.07)	0.433 (11.00)	0.205 (5.21)	1.250 (31.75)	1.156 (29.36)
Size 23	1.447 (36.75)	2.228 (56.59)	2.685 (68.20)	1.689 (42.90)	3.785 (96.14)	0.515 (13.08)	0.472 (11.99)	0.255 (6.48)	1.375 (34.93)	1.250 (31.75)
Size 25	1.694 (43.03)	2.475 (62.87)	2.932 (74.47)	1.812 (46.02)	4.033 (102.44)	0.515 (13.08)	0.472 (11.99)	0.255 (6.48)	1.500 (38.10)	1.375 (34.93)

Use (W638) = to denote sealing gasket supplied with wall-mount connectors.
All dimensions are in inches (mm shown in brackets) and are for reference only. Figure not to scale.

Amphenol LTD
MILITARY & AEROSPACE

Receptacles

Receptacle

WPTV-**00**XXXX-XXXX-**5**XX**A**

- Wall Mount Receptacle – Locking Ring Only, Tapped Hole Termination

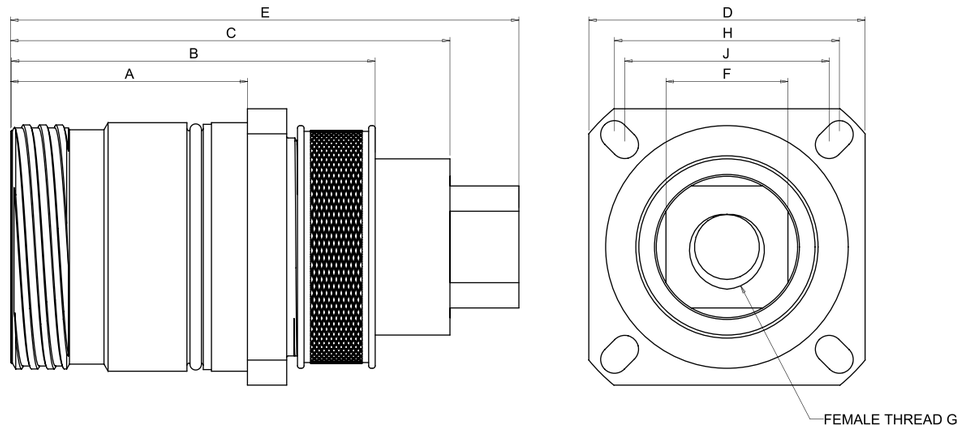

Shell size	A	B	C	D	E	F	Thread G	H	J
Size 13	0.868 (22.05)	1.529 (38.84)	1.869 (47.47)	1.125 (28.58)	2.070 (52.58	0.274 (6.96)	M4 x 12mm deep	0.906 (23.01)	0.812 (20.62)
Size 15	1.093 (27.76)	1.754 (44.55)	2.093 (53.16)	1.219 (30.96)	2.294 (58.27)	0.392 (9.96)	M6 x 12mm deep	0.969 (24.61)	0.906 (23.01)
Size 17	1.207 (30.66)	1.868 (47.45)	2.208 (56.08)	1.312 (33.32)	2.473 (62.81)	0.510 (12.95)	M8 x 15mm deep	1.062 (26.97)	0.969 (24.61)
Size 21	1.362 (34.59)	2.023 (51.38)	2.480 (62.99)	1.562 (39.67)	2.808 (71.32)	0.667 (16.94)	M10 x 18mm deep	1.250 (31.75)	1.156 (29.36)
Size 23	1.447 (36.75)	2.228 (56.59)	2.685 (68.20)	1.689 (42.90)	3.107 (78.92)	0.746 (18.95)	M12 x 18mm deep	1.375 (34.93)	1.250 (31.75)
Size 25	1.694 (43.03)	2.475 (62.87)	2.932 (74.47)	1.812 (46.02)	3.355 (85.22)	0.746 (18.95)	M12 x 18mm deep	1.500 (38.10)	1.375 (34.93)

Use (W638) = to denote sealing gasket supplied with wall-mount connectors.
All dimensions are in inches (mm shown in brackets) and are for reference only. Figure not to scale.

Receptacle

WPTV-**00**XXXX-XXXX-**1**XX**B,** also **-6**, **-7**, and **-8** reduced crimp options

- Wall Mount Receptacle – Straight Backshell, Crimp Termination

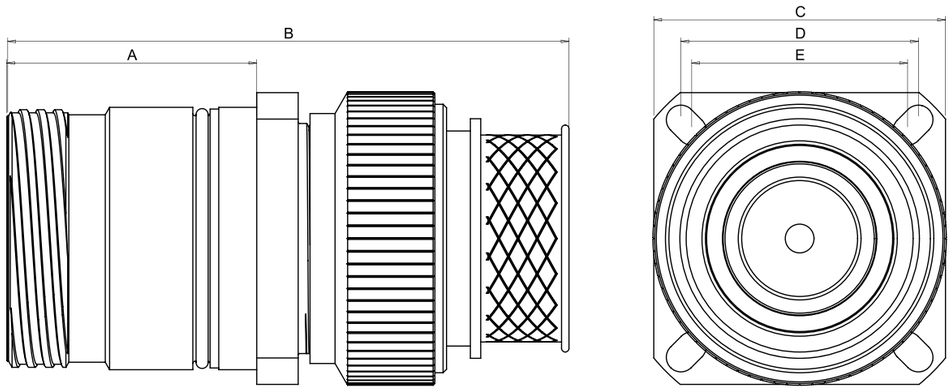

Shell size	A	B	C	D	E
Size 13	0.868 (22.05)	2.556 (64.92)	1.125 (28.58)	0.906 (23.01)	0.812 (20.62)
Size 15	1.093 (27.76)	2.781 (70.64)	1.219 (30.96)	0.969 (24.61)	0.906 (23.01)
Size 17	1.207 (30.66)	2.895 (73.53)	1.312 (33.32)	1.062 (26.97)	0.969 (24.61)
Size 21	1.362 (34.59)	3.050 (77.47)	1.562 (39.67)	1.250 (31.75)	1.156 (29.36)
Size 23	1.447 (36.75)	3.255 (82.68)	1.689 (42.90)	1.375 (34.93)	1.250 (31.75)
Size 25	1.694 (43.03)	4.055 (103.00)	1.812(46.02)	1.500 (38.10)	1.375 (34.93)

Use (W638) = to denote sealing gasket supplied with wall-mount connectors.
All dimensions are in inches (mm shown in brackets) and are for reference only. Figure not to scale.

Amphenol LTD
MILITARY & AEROSPACE

Receptacles

Receptacle

WPTV-**00**XXXX-XXXX-**1**XX**C,** also **-6**, **-7**, and **-8** reduced crimp options

- Wall Mount Receptacle – 90˚ Backshell, Crimp Termination

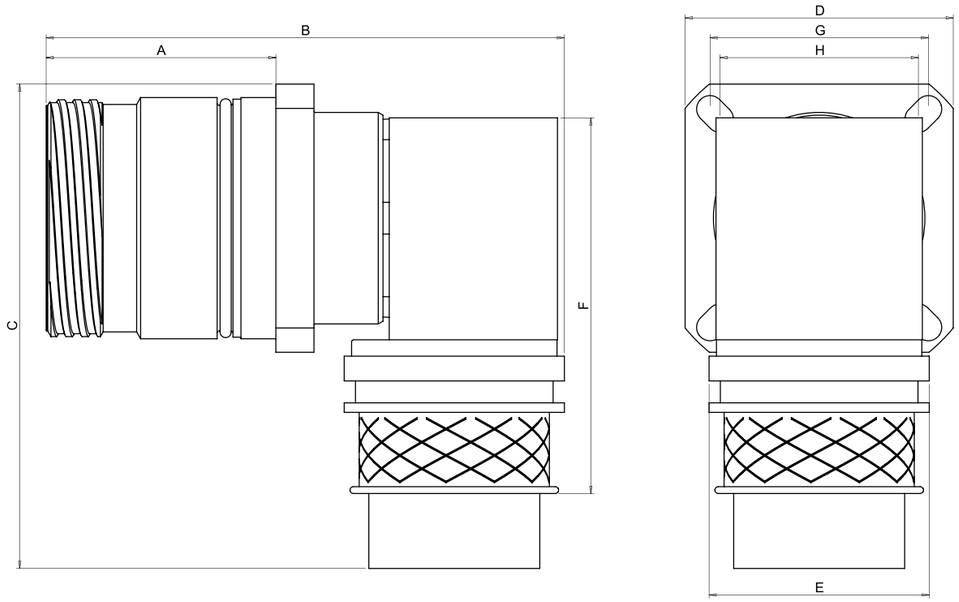

Shell Size	A	B	C	D	E	F	G	H
Size 13	0.868 (22.05)	2.556 (64.92)	2.343 (59.51)	1.125 (28.58)	0.782 (19.86)	1.832 (46.53)	0.906 (23.01)	0.812 (20.62)
Size 15	1.093 (27.76)	2.781 (70.64)	2.453 (62.31)	1.219 (30.96)	0.940 (23.88)	1.984 (50.39)	0.969 (24.61)	0.906 (23.01)
Size 17	1.207 (30.66)	2.895 (73.53)	2.569 (65.25)	1.312 (33.32)	1.033 (26.24)	2.131 (54.13)	1.062 (26.97)	0.969 (24.61)
Size 21	1.362 (34.59)	3.050 (77.47)	2.929 (74.40)	1.562 (39.67)	1.263 (32.08)	2.248 (57.10)	1.250 (31.75)	1.156 (29.36)
Size 23	1.447 (36.75)	3.255 (82.68)	3.051 (77.50)	1.689 (42.90)	1.387 (35.23)	2.368 (60.15)	1.375 (34.93)	1.250 (31.75)
Size 25	1.694 (43.03)	4.055 (103.00)	3.676 (93.37)	1.812(46.02)	1.726 (43.84)	2.808 (71.32)	1.500 (38.10)	1.375 (34.93)

Use (W638) = to denote sealing gasket supplied with wall-mount connectors. See page 47 for necessary 90° contact assembly tooling.
All dimensions are in inches (mm shown in brackets) and are for reference only. Figure not to scale.

Receptacle

WPTV-**01**XXXX-XXXX-**1**XX**A,** also **-6**, **-7**, and **-8** reduced crimp options

- Inline Receptacle – Locking Ring Only, Crimp Termination

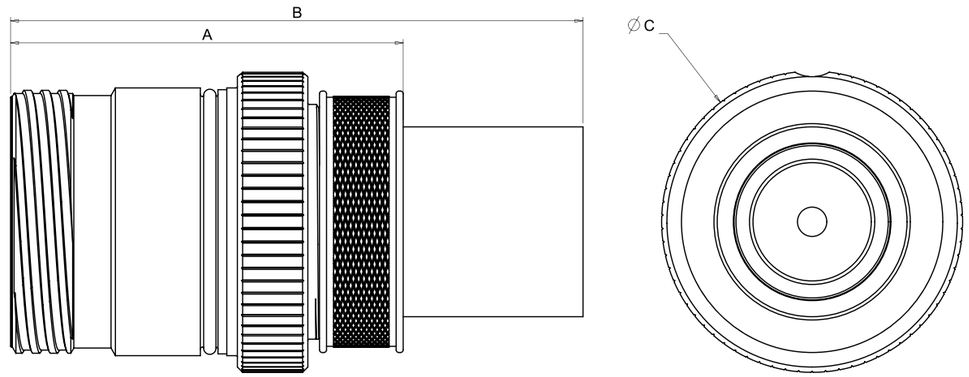

Shell size	A	B	ØC
Size 13	1.529 (38.84)	1.819 (46.20)	1.093 (27.76)
Size 15	1.754 (44.55)	2.114 (53.70)	1.220 (30.99)
Size 17	1.868 (47.45)	2.378 (60.40)	1.357 (34.47)
Size 21	2.023 (51.38)	2.587 (65.71)	1.591 (40.41)
Size 23	2.228 (56.59)	3.249 (82.52)	1.708 (43.38)
Size 25	2.475 (62.87)	4.052 (102.92)	1.835 (46.61)

All dimensions are in inches (mm shown in brackets) and are for reference only. Figure not to scale.

Amphenol LTD
MILITARY & AEROSPACE

Receptacles

Receptacle

WPTV-**01**XXXX-XXXX-**2**XX**A**

- Inline Receptacle – Locking Ring Only, Threaded Post Termination

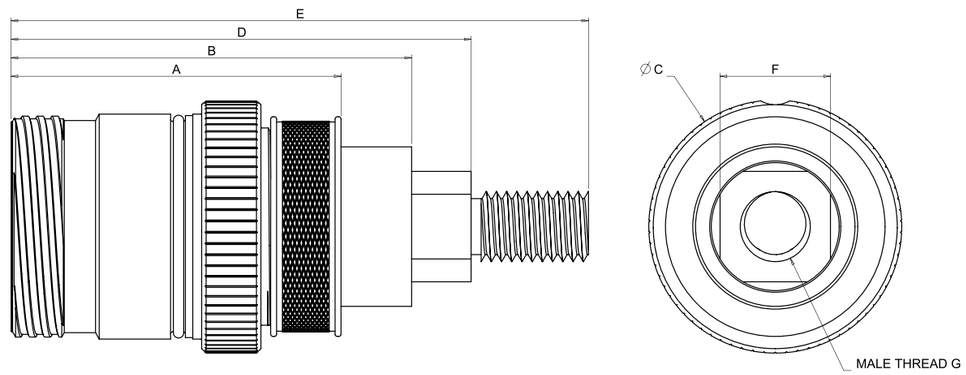

Shell Size	A	B	ØC	D	E	F	Thread G
Size 13	1.529 (38.84)	1.869 (47.47)	1.093 (27.76)	2.070 (52.58)	2.548 (64.72)	0.274 (6.96)	M4
Size 15	1.754 (44.55)	2.093 (53.16)	1.220 (30.99)	2.294 (58.27)	2.772 (70.41)	0.392 (9.96)	M6
Size 17	1.868 (47.45)	2.208 (56.08)	1.357 (34.47)	2.473 (62.81)	3.070 (77.98)	0.510 (12.95)	M8
Size 21	2.023 (51.38)	2.480 (62.99)	1.591 (40.41)	2.808 (71.32)	3.523 (89.48)	0.667 (16.94)	M10
Size 23	2.228 (56.59)	2.685 (68.20)	1.708 (43.38)	3.107 (78.92)	3.900 (99.06)	0.746 (18.95)	M12
Size 25	2.475 (62.87)	2.932 (74.47)	1.835 (46.61)	3.355 (85.22)	4.148 (105.36)	0.746 (18.95)	M12

All dimensions are in inches (mm shown in brackets) and are for reference only. Figure not to scale.

Receptacle

WPTV-**01**XXXX-XXXX-**3**XX**A**

- Inline Receptacle – Locking Ring Only, Flat Tail Termination

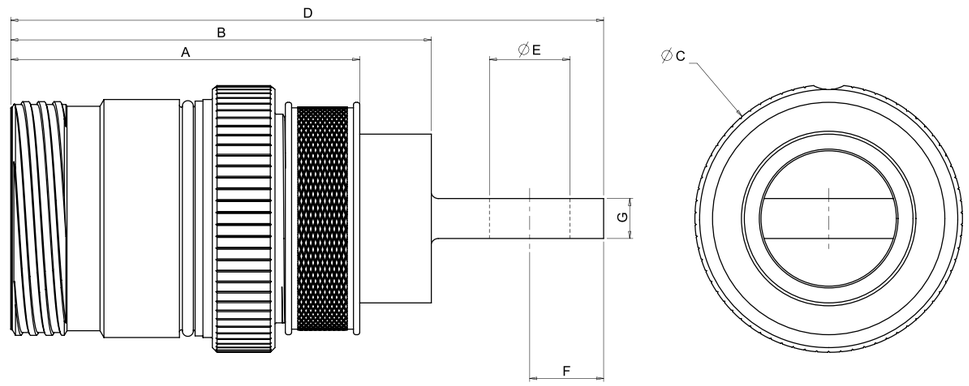

Shell size	A	B	ØC	D	ØE	F	G
Size 13	1.529 (38.84)	1.869 (47.47)	1.093 (27.76)	2.814 (71.48)	0.200 (5.08)	0.433 (11.00)	0.145 (3.68)
Size 15	1.754 (44.55)	2.093 (53.16)	1.220 (30.99)	3.038 (77.16)	0.279 (7.09)	0.433 (11.00)	0.145 (3.68)
Size 17	1.868 (47.45)	2.208 (56.08)	1.357 (34.47)	3.153 (80.09)	0.358 (9.09)	0.433 (11.00)	0.205 (5.21)
Size 21	2.023 (51.38)	2.480 (62.99)	1.591 (40.41)	3.424 (86.97)	0.436 (11.07)	0.433 (11.00)	0.205 (5.21)
Size 23	2.228 (56.59)	2.685 (68.20)	1.708 (43.38)	3.785 (96.14)	0.515 (13.08)	0.472 (11.99)	0.255 (6.48)
Size 25	2.475 (62.87)	2.932 (74.47)	1.835 (46.61)	4.033 (102.44)	0.515 (13.08)	0.472 (11.99)	0.255 (6.48)

All dimensions are in inches (mm shown in brackets) and are for reference only. Figure not to scale.

Amphenol LTD
MILITARY & AEROSPACE

Receptacles

Receptacle

WPTV-**01**XXXX-XXXX-**5**XX**A**

- Inline Receptacle – Locking Ring Only, Tapped Hole Termination

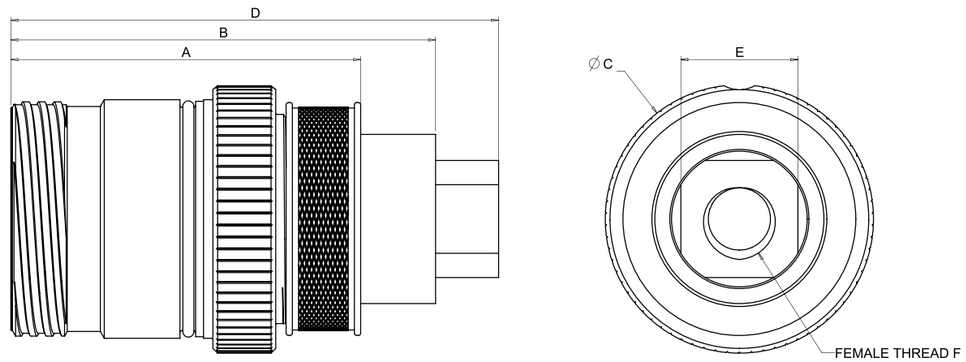

Shell Size	A	B	ØC	D	E	Thread F
Size 13	1.529 (38.84)	1.869 (47.47)	1.093 (27.76)	2.070 (52.58)	0.274 (6.96)	M4 x 12mm deep
Size 15	1.754 (44.55)	2.093 (53.16)	1.220 (30.99)	2.294 (58.27)	0.392 (9.96)	M6 x 12mm deep
Size 17	1.868 (47.45)	2.208 (56.08)	1.357 (34.47)	2.473 (62.81)	0.510 (12.95)	M8 x 15mm deep
Size 21	2.023 (51.38)	2.480 (62.99)	1.591 (40.41)	2.808 (71.32)	0.667 (16.94)	M10 x 18mm deep
Size 23	2.228 (56.59)	2.685 (68.20)	1.708 (43.38)	3.107 (78.92)	0.746 (18.95)	M12 x 18mm deep
Size 25	2.475 (62.87)	2.932 (74.47)	1.835 (46.61)	3.355 (85.22)	0.746 (18.95)	M12 x 18mm deep

All dimensions are in inches (mm shown in brackets) and are for reference only. Figure not to scale.

Receptacle

WPTV-**01**XXXX-XXXX-**1**XX**B,** also **-6**, **-7**, and **-8** reduced crimp options

- Inline Receptacle – Straight Backshell, Crimp Termination

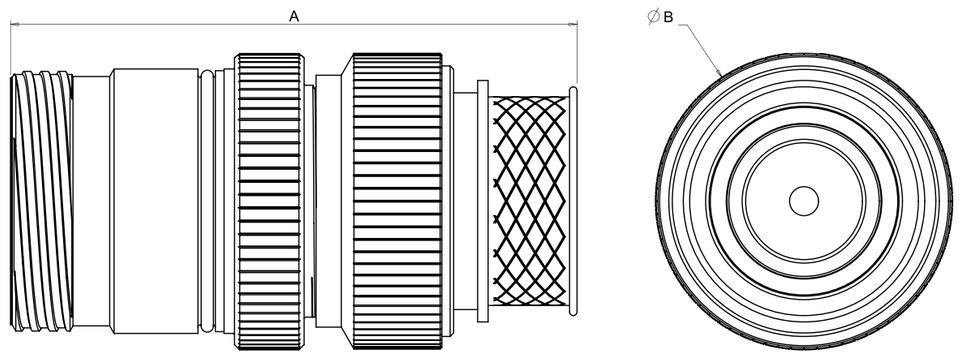

Shell size	A	ØB
Size 13	2.556 (64.92)	1.093 (27.76)
Size 15	2.781 (70.64)	1.220 (30.99)
Size 17	2.895 (73.53)	1.357 (34.47)
Size 21	3.050 (77.47)	1.591 (40.41)
Size 23	3.255 (82.68)	1.708 (43.38)
Size 25	4.055 (103.00)	1.835 (46.61)

All dimensions are in inches (mm shown in brackets) and are for reference only. Figure not to scale.

Amphenol LTD
MILITARY & AEROSPACE

Receptacles

Receptacle

WPTV-**01**XXXX-XXXX-**1**XX**C,** also **-6**, **-7**, and **-8** reduced crimp options

- Inline Receptacle – 90˚ Backshell, Crimp Termination

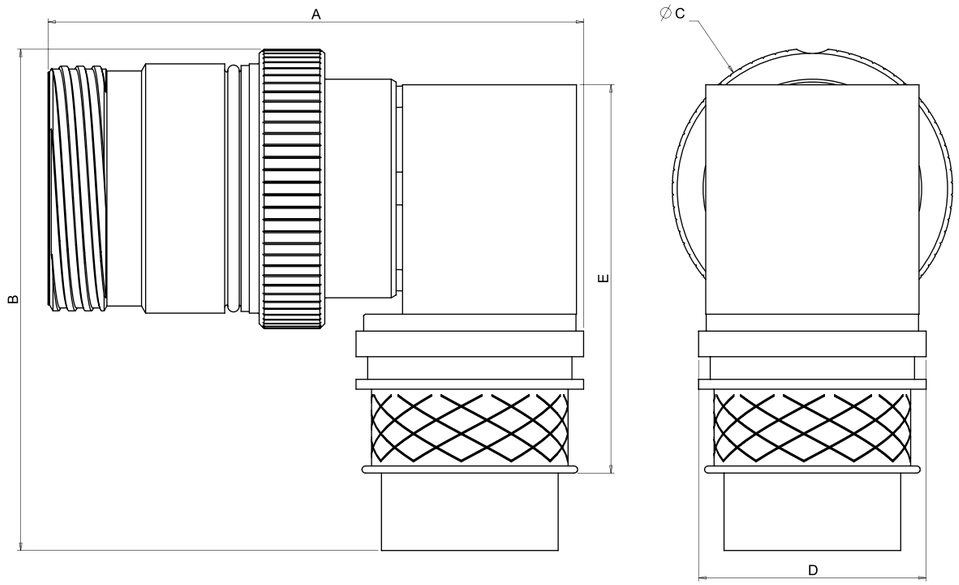

Shell Size	A	B	ØC	D	E
Size 13	2.139 (54.33)	2.343 (59.51)	1.093 (27.76)	0.782 (19.86)	1.832 (46.53)
Size 15	2.476 (62.89)	2.453 (62.31)	1.220 (30.99)	0.940 (23.88)	1.984 (50.39)
Size 17	2.689 (68.30)	2.569 (65.25)	1.357 (34.47)	1.033 (26.24)	2.131 (54.13)
Size 21	2.888 (73.36)	2.929 (74.40)	1.591 (40.41)	1.263 (32.08)	2.248 (57.10)
Size 23	3.265 (82.93)	3.051 (77.50)	1.708 (43.38)	1.387 (35.23)	2.368 (60.15)
Size 25	3.772 (95.81)	3.676 (93.37)	1.835 (46.61)	1.726 (43.84)	2.808 (71.32)

See page 47 for necessary 90° contact assembly tooling.
All dimensions are in inches (mm shown in brackets) and are for reference only. Figure not to scale.

Receptacle

WPTV-**07**XXXX-XXXX-**1**XX**A,** also **-6**, **-7**, and **-8** reduced crimp options

- Jam Nut Receptacle – Locking Ring Only, Crimp Termination

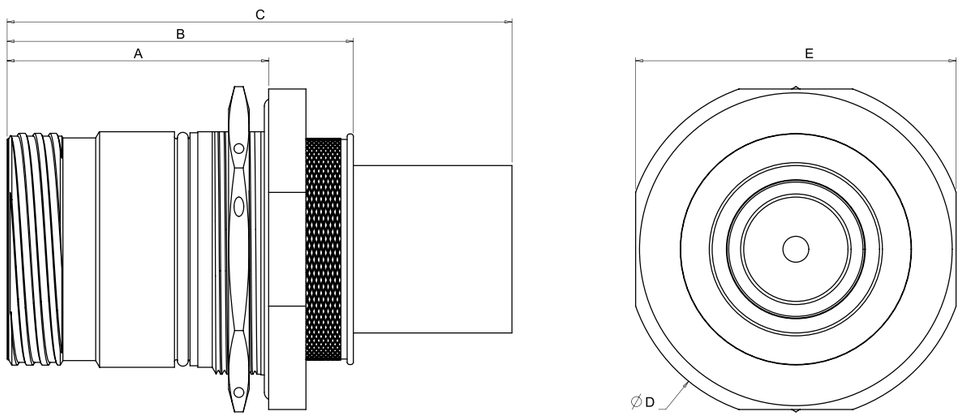

Shell size	A	B	C	ØD	E
Size 13	0.984 (24.99)	1.529 (38.84)	1.819 (46.20)	1.499 (38.07)	1.375 (34.93)
Size 15	1.209 (30.71)	1.754 (44.55)	2.114 (53.70)	1.625 (41.28)	1.500 (38.10)
Size 17	1.323 (33.60)	1.868 (47.45)	2.378 (60.40)	1.750 (44.45)	1.625 (41.28)
Size 21	1.478 (37.54)	2.023 (51.38)	2.587 (65.71)	2.062 (52.37)	1.938 (49.23)
Size 23	1.683 (42.75)	2.228 (56.59)	3.249 (85.52)	2.188 (55.58)	2.062 (52.37)
Size 25	1.930 (49.02)	2.475 (62.87)	4.052 (102.92)	2.311 (58.70)	2.188 (55.58)

Use (W587) = to denote castellated panel nut.
All dimensions are in inches (mm shown in brackets) and are for reference only. Figure not to scale.

Amphenol LTD
MILITARY & AEROSPACE

Receptacles

Receptacle

WPTV-**07**XXXX-XXXX-**2**XX**A,** also **-6**, **-7**, and **-8** reduced crimp options

- Jam Nut Receptacle – Locking Ring Only, Threaded Post Termination

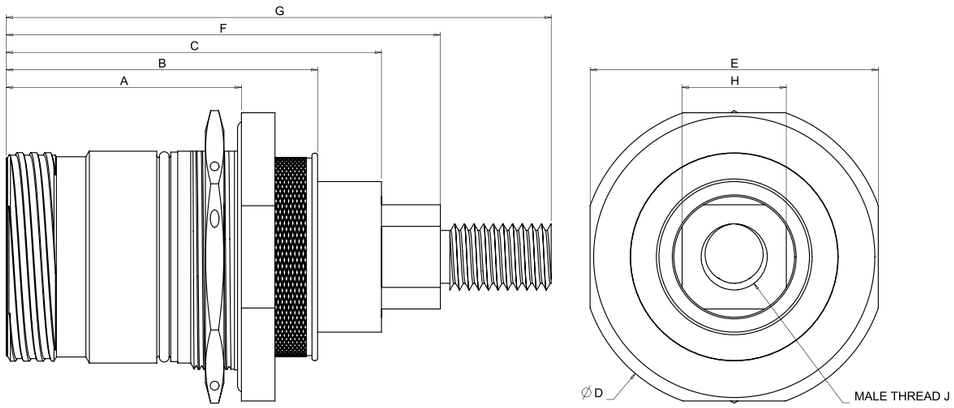

Shell Size	A	B	C	ØD	E	F	G	H	Thread J
Size 13	0.984 (24.99)	1.529 (38.84)	1.869 (46.20)	1.499 (38.07)	1.375 (34.93)	2.070 (52.58)	2.548 (64.72)	0.274 (6.96)	M4
Size 15	1.209 (30.71)	1.754 (44.55)	2.093 (53.70)	1.625 (41.28)	1.500 (38.10)	2.294 (58.27)	2.772 (70.41)	0.392 (9.96)	M6
Size 17	1.323 (33.60)	1.868 (47.45)	2.208 (60.40)	1.750 (44.45)	1.625 (41.28)	2.473 (62.81)	3.070 (77.98)	0.510 (12.95)	M8
Size 21	1.478 (37.54)	2.023 (51.38)	2.480 (65.71)	2.062 (52.37)	1.938 (49.23)	2.808 (71.32)	3.523 (89.48)	0.667 (16.94)	M10
Size 23	1.683 (42.75)	2.228 (56.59)	2.685 (85.52)	2.188 (55.58)	2.062 (52.37)	3.107 (78.92)	3.900 (99.06)	0.746 (18.95)	M12
Size 25	1.930 (49.02)	2.475 (62.87)	2.932 (102.92)	2.311 (58.70)	2.188 (55.58)	3.355 (85.22)	4.148 (105.36)	0.746 (18.95)	M12

Use (W587) = to denote castellated panel nut.
All dimensions are in inches (mm shown in brackets) and are for reference only. Figure not to scale.

Receptacle

WPTV-**07**XXXX-XXXX-**3**XX**A**

- Jam Nut Receptacle – Locking Ring Only, Flat Tail Termination

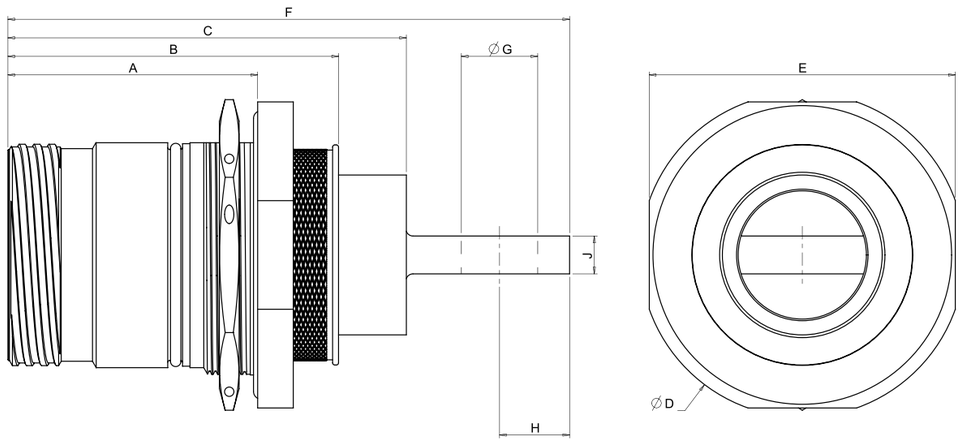

Shell size	A	B	C	ØD	E	F	ØG	H	J
Size 13	0.984 (24.99)	1.529 (38.84)	1.869 (46.20)	1.499 (38.07)	1.375 (34.93)	2.814 (71.48)	0.200 (5.08)	0.433 (11.00)	0.145 (3.68)
Size 15	1.209 (30.71)	1.754 (44.55)	2.093 (53.70)	1.625 (41.28)	1.500 (38.10)	3.038 (77.16)	0.279 (7.09)	0.433 (11.00)	0.145 (3.68)
Size 17	1.323 (33.60)	1.868 (47.45)	2.208 (60.40)	1.750 (44.45)	1.625 (41.28)	3.153 (80.09)	0.358 (9.09)	0.433 (11.00)	0.205 (5.21)
Size 21	1.478 (37.54)	2.023 (51.38)	2.480 (65.71)	2.062 (52.37)	1.938 (49.23)	3.424 (86.97)	0.436 (11.07)	0.433 (11.00)	0.205 (5.21)
Size 23	1.683 (42.75)	2.228 (56.59)	2.685 (85.52)	2.188 (55.58)	2.062 (52.37)	3.785 (96.14)	0.515 (13.08)	0.472 (11.99)	0.255 (6.48)
Size 25	1.930 (49.02)	2.475 (62.87)	2.932 (102.92)	2.311 (58.70)	2.188 (55.58)	4.033 (102.44)	0.515 (13.08)	0.472 (11.99)	0.255 (6.48)

Use (W587) = to denote castellated panel nut.
All dimensions are in inches (mm shown in brackets) and are for reference only. Figure not to scale.

Amphenol LTD
MILITARY & AEROSPACE

Receptacles

Receptacle

WPTV-**07**XXXX-XXXX-**5**XX**A**

- Jam Nut Receptacle – Locking Ring Only, Tapped Hole Termination

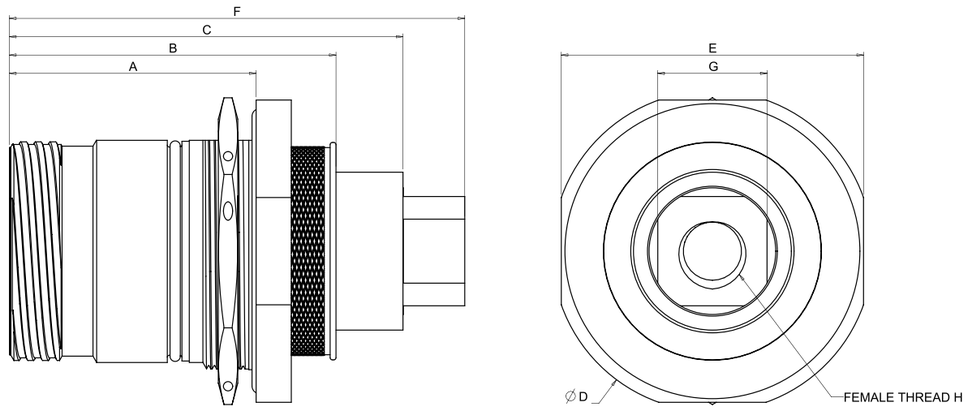

Shell Size	A	B	C	ØD	E	F	G	Thread H
Size 13	0.984 (24.99)	1.529 (38.84)	1.869 (46.20)	1.499 (38.07)	1.375 (34.93)	2.070 (52.58)	0.274 (6.96)	M4 x 12mm deep
Size 15	1.209 (30.71)	1.754 (44.55)	2.093 (53.70)	1.625 (41.28)	1.500 (38.10)	2.294 (58.27)	0.392 (9.96)	M6 x 12mm deep
Size 17	1.323 (33.60)	1.868 (47.45)	2.208 (60.40)	1.750 (44.45)	1.625 (41.28)	2.473 (62.81)	0.510 (12.95)	M8 x 15mm deep
Size 21	1.478 (37.54)	2.023 (51.38)	2.480 (65.71)	2.062 (52.37)	1.938 (49.23)	2.808 (71.32)	0.667 (16.94)	M10 x 18mm deep
Size 23	1.683 (42.75)	2.228 (56.59)	2.685 (85.52)	2.188 (55.58)	2.062 (52.37)	3.107 (78.92)	0.746 (18.95)	M12 x 18mm deep
Size 25	1.930 (49.02)	2.475 (62.87)	2.932 (102.92)	2.311 (58.70)	2.188 (55.58)	3.355 (85.22)	0.746 (18.95)	M12 x 18mm deep

Use (W587) = to denote castellated panel nut.
All dimensions are in inches (mm shown in brackets) and are for reference only. Figure not to scale.

Receptacle

WPTV-**07**XXXX-XXXX-**1**XX**B,** also **-6**, **-7**, and **-8** reduced crimp options

- Jam Nut Receptacle – Straight Backshell, Crimp Termination

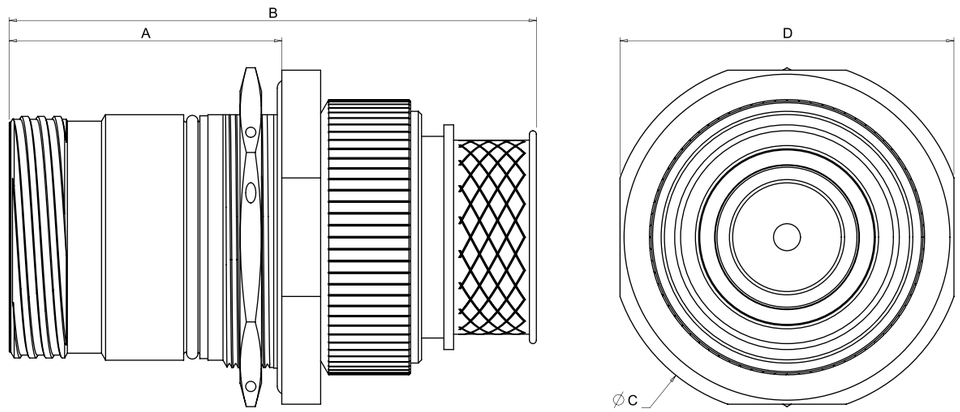

Shell size	A	B	ØC	D
Size 13	0.984 (24.99)	2.556 (64.92)	1.499 (38.07)	1.375 (34.93)
Size 15	1.209 (30.71)	2.781 (70.64)	1.625 (41.28)	1.500 (38.10)
Size 17	1.323 (33.60)	2.895 (73.53)	1.750 (44.45)	1.625 (41.28)
Size 21	1.478 (37.54)	3.050 (77.47)	2.062 (52.37)	1.938 (49.23)
Size 23	1.683 (42.75)	3.255 (82.68)	2.188 (55.58)	2.062 (52.37)
Size 25	1.930 (49.02)	4.055 (103.00)	2.311 (58.70)	2.188 (55.58)

Use (W587) = to denote castellated panel nut.
All dimensions are in inches (mm shown in brackets) and are for reference only. Figure not to scale.

Amphenol LTD
MILITARY & AEROSPACE

Receptacles

Receptacle

WPTV-**07**XXXX-XXXX-**1**XX**C,** also **-6**, **-7**, and **-8** reduced crimp options

- Jam Nut Receptacle – 90˚ Backshell, Crimp Termination

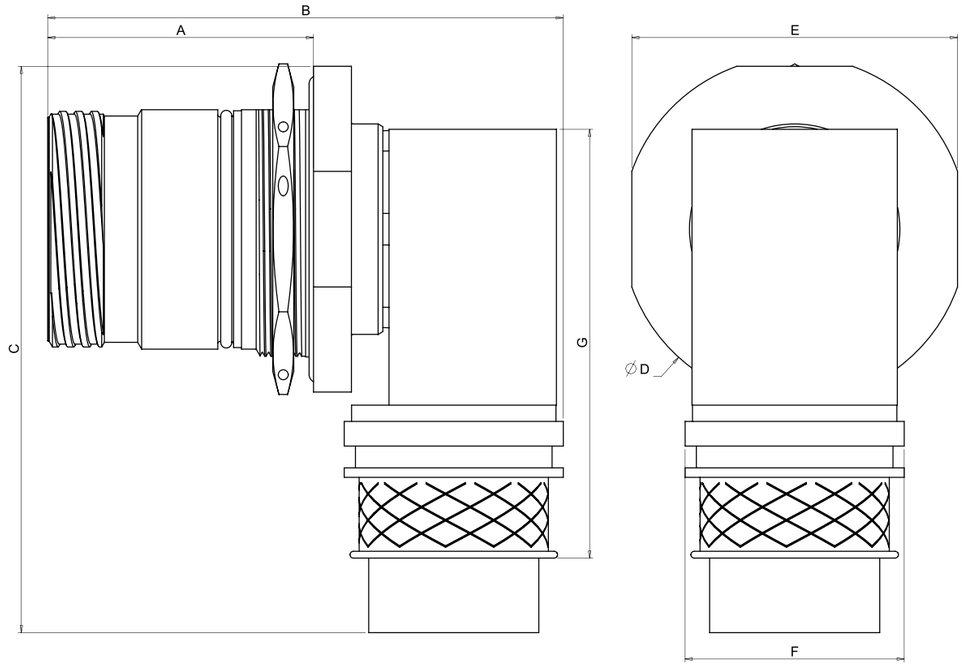

Shell Size 1	A	B	C	ØD	E	F	G
Size 13	0.984 (24.99)	2.139 (54.33)	2.343 (59.51)	1.499 (38.07)	1.375 (34.93)	0.782 (19.86)	1.832 (46.53)
Size 15	1.209 (30.71)	2.476 (62.89)	2.453 (62.31)	1.625 (41.28)	1.500 (38.10)	0.940 (23.88)	1.984 (50.39)
Size 17	1.323 (33.60)	2.689 (68.30)	2.569 (65.25)	1.750 (44.45)	1.625 (41.28)	1.033 (26.24)	2.131 (54.13)
Size 21	1.478 (37.54)	2.888 (73.36)	2.929 (74.40)	2.062 (52.37)	1.938 (49.23)	1.263 (32.08)	2.248 (57.10)
Size 23	1.683 (42.75)	3.265 (82.93)	3.051 (77.50)	2.188 (55.58)	2.062 (52.37)	1.387 (35.23)	2.368 (60.15)
Size 25	1.930 (49.02)	3.772 (95.81)	3.676 (93.37)	2.311 (58.70)	2.188 (55.58)	1.726 (43.84)	2.808 (71.32)

Use (W587) = to denote castellated panel nut. See page 47 for necessary 90˚ contact assembly tooling.
All dimensions are in inches (mm shown in brackets) and are for reference only. Figure not to scale.

Accessories – table of styles

WPTV-PC-XX-XX
Page 40

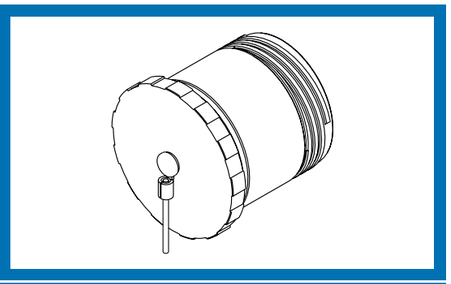

WPTV-PC-LZ-XX
Page 41

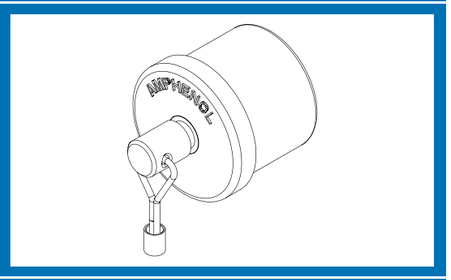

WPTV-RC-XX-XX
Page 42

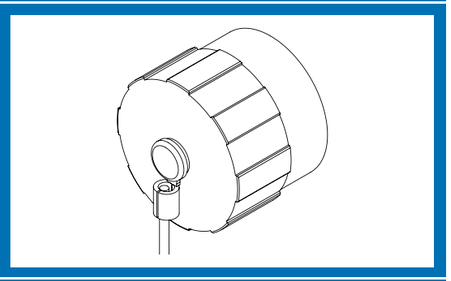

WPTV-RC-LZ-XX
Page 43

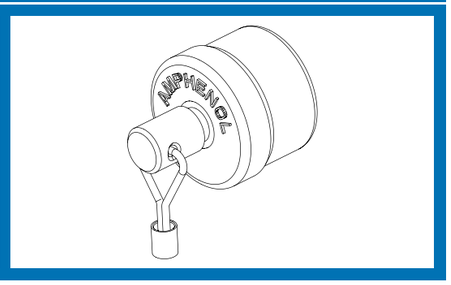

Amphenol LTD
MILITARY & AEROSPACE

Accessories

Cap assembly part numbering

WPTV-	XX-	XX-	XX
Series identifier	**Style**	**Material and finish**	**Shell size**
	PC = Plug Cap	ZN = Aluminium, Black Zinc Nickel	13
	RC = Receptacle Cap	RW = Aluminium, Cad Olive Drab	15
		RF = Aluminium, Electroless Nickel	17
		SS = Stainless Steel*	21
		RB = Aluminium Bronze*	23
		LZ = Low Smoke Zero Halogen Reinforced Polymer	25

*consult factory for availability

Part number example

WPTV- PC- ZN- 23-

Series

Plug Cap

Black Zinc Nickel finish
Aluminium body

Shell size 23

The dust cap for the Rhino 38999 series is available in two styles: metal or polymer.

Rhino 38999 caps are all supplied with a 450mm +/– 6mm black Terylene cord lanyard, basic crimp ferrule and crimp eyelet for the user to terminate to their own specification.

Accessories

WPTV-**PC**-XX-XX

- Metal cap assembly for plugs

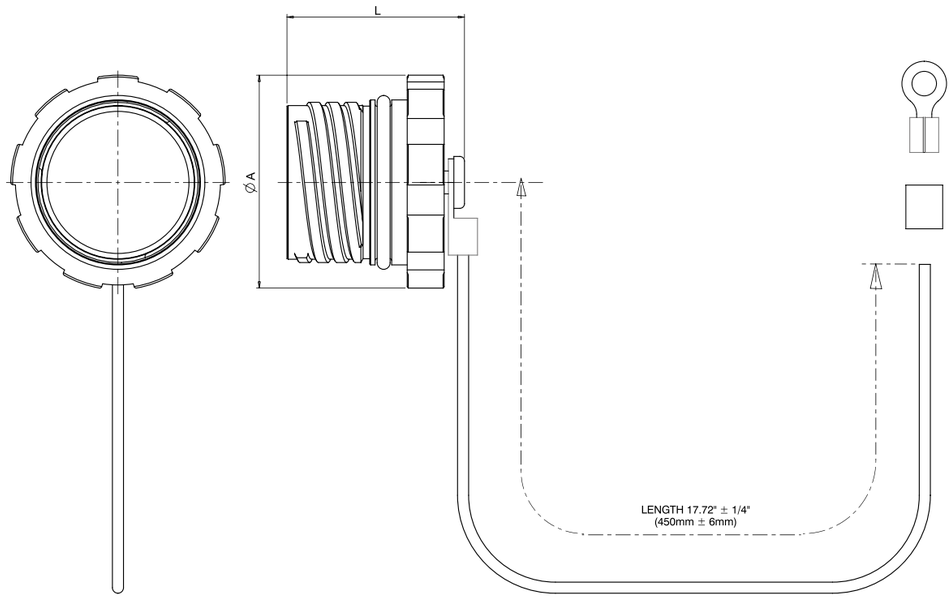

Shell size	Part number	ØA	L
Size 13	WPTV-PC-XX-13	1.161 (29.49)	0.961 (24.41)
Size 15	WPTV-PC-XX-15	1.240 (31.50)	1.186 (30.12)
Size 17	WPTV-PC-XX-17	1.375 (34.93)	1.294 (32.87)
Size 21	WPTV-PC-XX-21	1.610 (40.89)	1.329 (33.76)
Size 23	WPTV-PC-XX-23	1.730 (43.94)	1.534 (38.96)
Size 25	WPTV-PC-XX-25	1.855 (47.12)	1.782 (45.26)

XX = material and finish
All dimensions are in inches (mm shown in brackets) and are for reference only. Figure not to scale.

Amphenol LTD
MILITARY & AEROSPACE

Accessories

Accessories

WPTV-**PC-LZ**-XX

- Polymer cap assembly for plugs

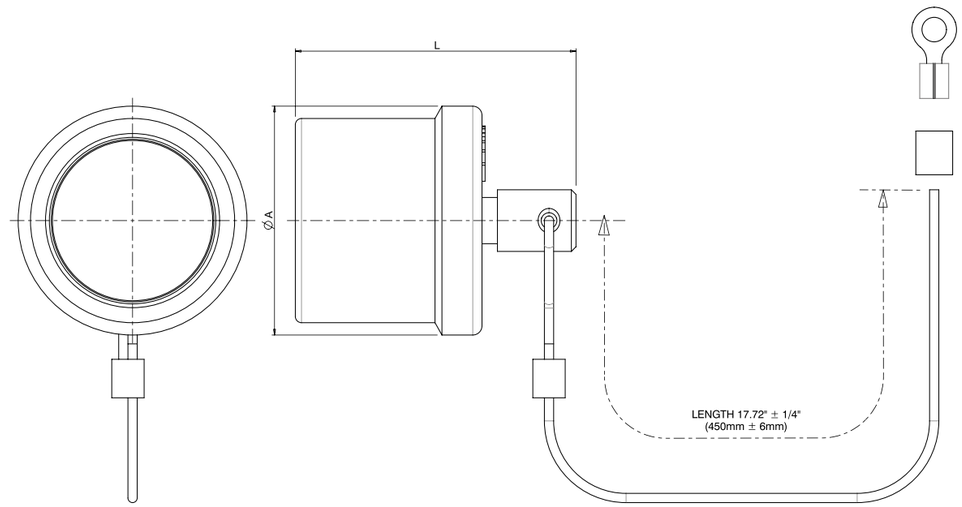

Shell size	Part number	ØA	L
Size 13	WPTV-PC-LZ-13	1.485 (37.72)	1.892 (48.06)
Size 15	WPTV-PC-LZ-15	1.614 (41.00)	2.116 (53.75)
Size 17	WPTV-PC-LZ-17	1.751 (44.48)	2.211 (56.16)
Size 21	WPTV-PC-LZ-21	1.985 (50.42)	2.265 (57.53)
Size 23	WPTV-PC-LZ-23	2.102 (53.39)	2.471 (62.76)
Size 25	WPTV-PC-LZ-25	2.229 (56.62)	2.688 (68.28)

All dimensions are in inches (mm shown in brackets) and are for reference only. Figure not to scale.

Accessories

WPTV-**RC**-XX-XX

- Metal cap assembly for receptacles

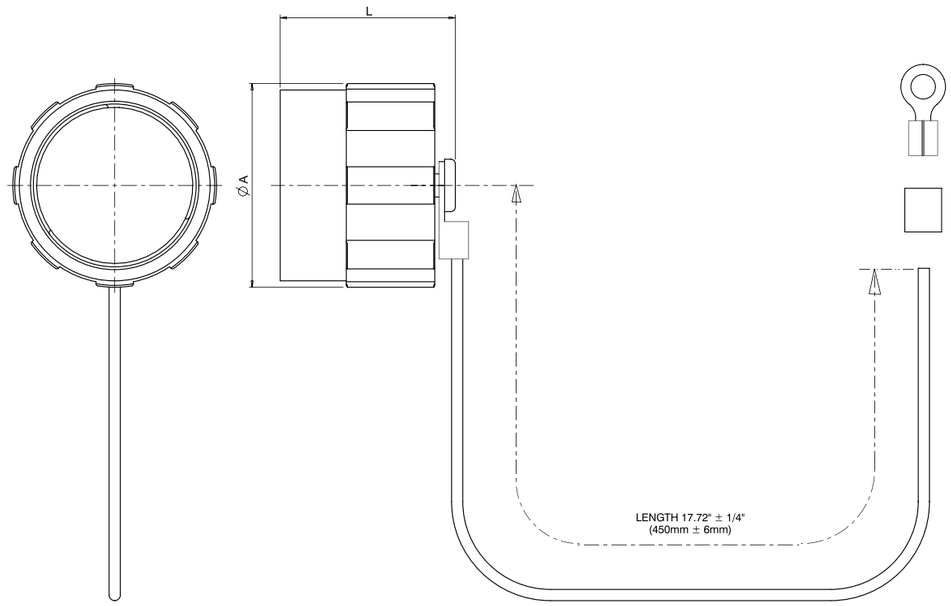

Shell size	Part number	ØA	L
Size 13	WPTV-RC-XX-13	1.091 (27.71)	0.938 (23.83)
Size 15	WPTV-RC-XX-15	1.217 (30.91)	1.128 (28.65)
Size 17	WPTV-RC-XX-17	1.418 (36.02)	1.242 (31.55)
Size 21	WPTV-RC-XX-21	1.573 (39.95)	1.297 (32.94)
Size 23	WPTV-RC-XX-23	1.699 (43.15)	1.520 (38.61)
Size 25	WPTV-RC-XX-25	1.825 (46.36)	1.742 (44.25)

XX = material and finish.
All dimensions are in inches (mm shown in brackets) and are for reference only. Figure not to scale.

Amphenol LTD
MILITARY & AEROSPACE

Accessories

Accessories

WPTV-**RC-LZ**-XX

- Polymer cap assembly for receptacles

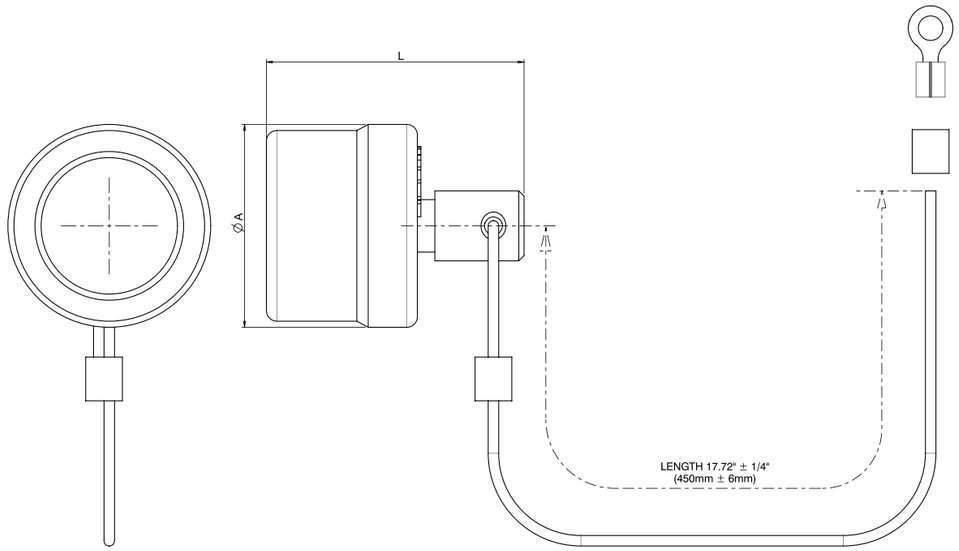

Shell size	Part number	ØA	L
Size 13	WPTV-RC-LZ-13	1.160 (29.46)	1.528 (38.81)
Size 15	WPTV-RC-LZ-15	1.285 (32.64)	1.608 (40.84)
Size 17	WPTV-RC-LZ-17	1.438 (36.53)	1.608 (40.84)
Size 21	WPTV-RC-LZ-21	1.648 (41.86)	1.608 (40.84)
Size 23	WPTV-RC-LZ-23	1.773 (45.03)	1.608 (40.84)
Size 25	WPTV-RC-LZ-25	1.895 (48.13)	1.608 (40.84)

All dimensions are in inches (mm shown in brackets) and are for reference only. Figure not to scale.

Installation

Guide to installation documents available on request

The following documents are available on request or from our website to provide additional information regarding the termination and installation of Rhino 38999 connectors.

Document title	Description
123GB-0826	Panel cutout dimensions for all sizes and styles
123GB-0839	Assembly instructions for wall mount receptacles with part numbers beginning WPTV-00...
123GB-0840	Assembly instructions for inline receptacles with part numbers beginning WPTV-01...
123GB-0841	Assembly instructions for plugs with part numbers beginning WPTV-06...
123GB-0842	Assembly instructions for jam nut receptacles with part numbers beginning WPTV-07...
123GB-0845	Specified torque settings for contact and backshell assembly
123GB-0846	Contains information regarding crimp tools and settings for carrying out crimp termination to straight and right angle backshell connectors

Amphenol LTD
MILITARY & AEROSPACE

Installation

Installation

Panel cut-out data

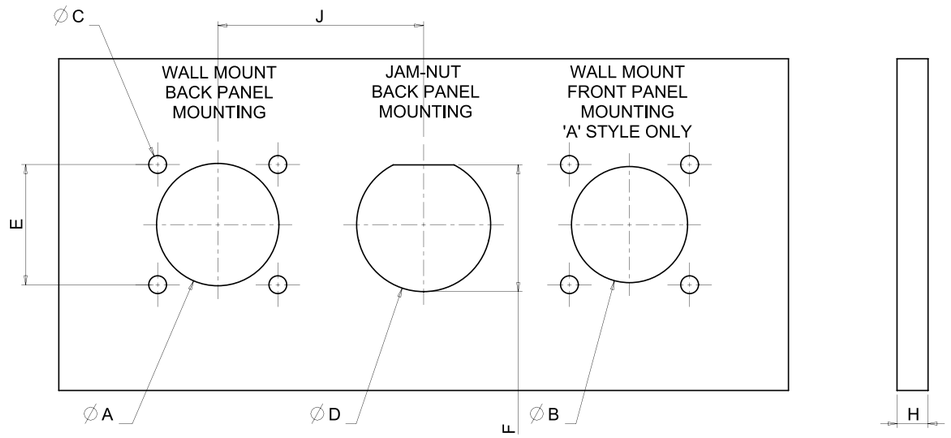

Shell size	A	B	C Imperial	C Metric	D	E	F	H – max panel thickness	J
Size 13	0.922 (23.42)	0.875 (22.22)	0.128 (3.25)	0.134 (3.40)	1.010 (25.65)	0.906 (23.01)	0.955 (24.26)	0.234 (05.94)	1.552 (39.42)
Size 15	1.047 (26.59)	1.080 (25.91)	0.128 (3.25)	0.134 (3.40)	1.135 (28.83)	0.969 (24.61)	1.085 (27.56)	0.234 (05.94)	1.674 (42.52)
Size 17	1.219 (30.96)	1.160 (29.46)	0.128 (3.25)	0.134 (3.40)	1.260 (32.00)	1.062 (26.97)	1.210 (30.73)	0.234 (05.94)	1.800 (45.72)
Size 21	1.422 (36.12)	1.350 (34.25)	0.128 (3.25)	0.134 (3.40)	1.510 (38.35)	1.250 (31.75)	1.460 (37.08)	0.204 (05.18)	2.036 (51.71)
Size 23	1.547 (39.29)	1.513 (38.43)	0.154 (3.91)	0.177 (4.50)	1.635 (41.53)	1.375 (34.93)	1.585 (40.26)	0.204 (05.18)	2.162 (54.91)
Size 25	1.672 (42.47)	1.631 (41.43)	0.150 (3.81)	0.177 (4.50)	1.760 (44.70)	1.500 (38.10)	1.710 (43.43)	0.204 (05.18)	2.284 (58.01)

Notes:

Rhino 38999 is designed to fit within existing MIL-DTL-38999L panel cutouts when fitting from the rear of the panel in all cases.

When installing wall mount receptacles choose dimensions from either the C Imperial or C Metric columns dependant on the fixings selected.

Jam nut mounting receptacles, Wall mount straight backshell ‘B’ style and all 90˚ backshell ‘C’ style connectors are designed for rear mounting applications only.

Jam nut max panel thickness is 0.125 (03.18), minimum 0.062 (01.57).

Use (W638) deviation code to specify panel sealing gasket to be supplied with Wall mount connector.

Please note spacing of connectors and cable may affect heat generation and/or cross-talk, and thus should be taken into account when calculating de-rating.

Installation

Backshell dimensions

The dimensions given below are intended to aid with the selection of heatshrink tubes, adaptors and termination accessories. Rhino 38999 connectors are already supplied complete with backshell components thus eliminating the need to separately procure a suitable strain relief clamp or adaptor.

Rhino 38999 backshells are designed to suit termination by either traditional heatshrink or overmoulding and feature a knurled area for braid retention providing both strain relief and 360 degree screening for when shielded cable is selected.

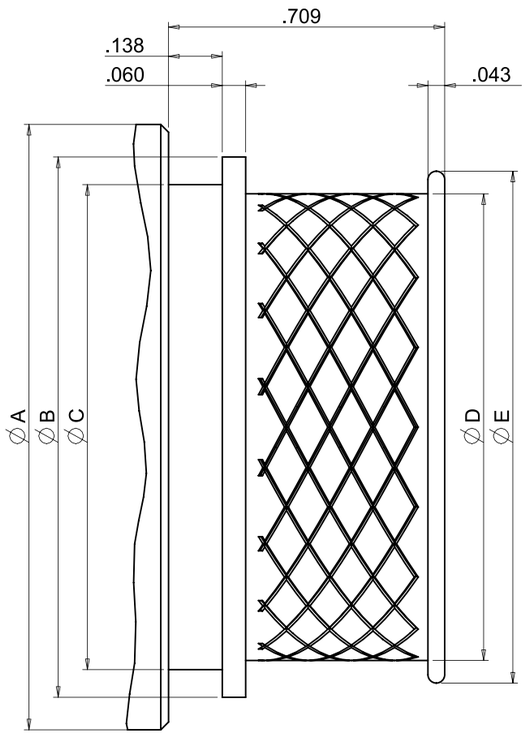

Shell size	ØA	ØB	ØC	ØD	ØE
Size 13	0.804 (20.42)	0.782 (19.86)	0.689 (17.50)	0.592 (15.04)	0.708 (17.98)
Size 15	0.992 (25.20)	0.940 (23.88)	0.848 (21.54)	0.751 (19.08)	0.867 (22.02)
Size 17	1.117 (28.37)	1.033 (26.24)	0.941 (23.90)	0.841 (21.36)	0.957 (24.31)
Size 21	1.429 (36.30)	1.263 (32.08)	1.121 (28.47)	1.073 (27.25)	1.189 (30.20)
Size 23	1.554 (39.47)	1.387 (35.23)	1.245 (31.62)	1.198 (30.43)	1.314 (33.38)
Size 25	1.554 (39.47)	1.726 (43.84)	1.584 (40.23)	1.537 (39.04)	1.653 (41.99)

For 90˚ EMC backshell there is no variation between ØA and ØB; ØB value applies to both diameters.
All dimensions are in inches (mm shown in brackets) and are for reference only. Figure not to scale.

Amphenol LTD
MILITARY & AEROSPACE

Installation

Tooling

90˚contact assembly tooling

The contact assembly tooling below is required to terminate connectors with part numbers ending 'C' which denotes a right angle backshell. The tools are required to secure the contact into the backshell assembly. Tooling is gender specific to pin or socket contacts but generic across connector styles – e.g. Plug and Receptacle. For instructions and recommended torque values view the latest issue of document reference 123gb-0845 on our website.

Pin contact assembly tooling

Series	Style	Size	Reference view
294GB –	5063 –	13 15 17 21 23 25	

Socket contact assembly tooling

Series	Style	Size	Reference view
294GB –	5064 –	13 15 17 21 23 25	

Castellated Jam nut (W587) assembly tooling

A castellated panel nut is provided in place of a standard nut when deviation W587 is applied to the connector part number. This castellated nut is tightened with the below tooling and used in instances where there are space constraints which prohibit the use of a spanner, or where an extra element of tamper proofing is desired.

Series	Style	Size	Reference view
294GB –	5065 –	13 15 17 21 23 25	

Installation

Torque fixtures

The below torque fixtures are available to order as an assembly aid for the termination of backshells and locking rings to the correct torque values. Whilst by no means essential, they are a useful aid in reducing termination and assembly time.

For instructions and recommended torque values view the latest issue of document reference 123GB-0845 on our website.

Torque fixture to assist with assembly of plug connectors

Series	Style	Size	Key	Reference view
294GB –	5069 –	13 –	N	
		15 –	A	
		17 –	B	
		21 –	C	
		23 –	D	
		25 –	E	

Torque fixture to assist with assembly of receptacle connectors

Series	Style	Size	Key	Reference view
294GB –	5070 –	13 –	N	
		15 –	A	
		17 –	B	
		21 –	C	
		23 –	D	
		25 –	E	

Castellated panel nut (W587)

Part Number	A	B	'E' Thread
418-2280-13-XX	1.188 (30.18)	0.998 (25.35)	M25
418-2280-15-XX	1.300 (33.02)	1.118 (28.40)	M28
418-2280-17-XX	1.438 (36.53)	1.274 (32.36)	M32
418-2280-21-XX	1.688 (42.88)	1.465 (37.21)	M38
418-2280-23-XX	1.812 (46.02)	1.628 (41.35)	M41
418-2280-25-XX	2.000 (50.80)	1.746 (44.35)	M44

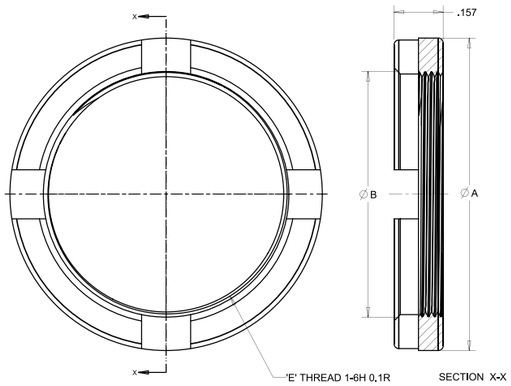

Amphenol LTD
MILITARY & AEROSPACE

Range extensions

Amphenol Ltd has developed a number of complementary products to the Rhino 38999 range extending its applicability beyond the traditional interconnect styles and methods. The following information is provided as an indicator of available Rhino 38999 range extensions but it is by no means exhaustive. Please consult with the Amphenol Application Engineering team to specify the most appropriate solution for each scenario and should more information be required, then please request a more detailed data sheet or drawing.

Through Bulkhead Rhino 38999

Intermateable with standard Rhino 38999s in a compact bulkhead penetrating format. Supplied as square flange mounting or jam nut mounting. Also available in extended reach penetration shells.

WPTV – B J ZN – 23 – 500 – P S N

WPTV – Rhino 38999 Series
B – Thru-bulkhead style
J – Jam nut style (omit for wall mount)
ZN – Material/finish (options W, K, S, B)
23 – Shell size (options 13, 15, 17, 21, 23, 25)
500 – Current rating (options 85, 120, 185, 340, 500, 1000)
P – Contact gender short side (options P, S)
S – Contact gender long side (options P, S)
N – Keyway (options N, A, B, C, D, E)

Reverse Bayonet Rhino 5015

Standard Rhino single-pole power contacts and insulators housed within MIL-C-5015 reverse bayonet style shells for use on vehicle applications in particular.

WP97 – 06 ZN 23 – 500 – 1 P N A

WP97 – Rhino 97 Series
06 – Shell style (options 00, 01, 06, 07)
ZN – Material/finish (options RW, RF, SS, RB)
23 – Shell size (options 13, 15, 17, 21, 23, 25)
500 – Current rating (options 85, 120, 185, 340, 500, 1000)
1 – Contact termination (1, 2, 3, 5, 6, 7, 8)
P – Pin contact gender (options P, S)
N – Keyway (options N)
A – Backshell (options A, B, C)

Range extensions

Push-Pull Rhino

Standard Rhino single-pole power contacts and insulators housed within a breakaway style shell for rack and panel or push-pull applications.

WPPP – 06 ZN 23 – 500 – 1 P N A

- WPPP – Rhino Push-Pull Series
- 06 – Shell style (options 00, 01, 06, 07)
- ZN – Material/finish (options RW, RF)
- 23 – Shell size (options 13, 15, 17, 21, 23, 25)
- 500 – Current rating (options 85, 120, 185, 340, 500, 1000)
- 1 – Contact termination (1, 2, 3, 5, 6, 7, 8)
- P – Pin contact gender (options P, S)
- N – Keyway (options N, A, B, C, D, E)
- A – Backshell (options A, B, C)

Rhino LITE

Rhino LITE is adapted for use with aluminium power cable or busbars and is almost 40% lighter than Rhino 38999. On applications where weight is at a premium, Rhino LITE, when used with compatible aluminium conductors, results in overall power system weight savings of over 30% on average.

WPTV – 06 ZN 23 – 500 – 1 M N A

- WPTV – Rhino 38999 Series
- 06 – Shell style (options 00, 01, 06, 07)
- ZN – Material/finish (options RW, RF, SS, RB, RT)
- 23 – Shell size (options 17, 21, 23, 25)
- 500 – Current rating (options 185, 340, 500, 1000)
- 1 – Contact termination (1, 2, 3, 5, 6, 7, 8)
- M – Aluminium contact gender (options M, F)
- N – Keyway (options N, A, B, C, D, E)
- A – Backshell (options A, B, C)

Amphenol LTD
MILITARY & AEROSPACE

Range extensions

Range extensions

Rectangular Multi-Pole Rhino

For use where multiple poles are required. Suitable for use on batteries. Contact genders are interchangeable and may also be mixed pin-socket combinations – consult factory for availability. Supplied with crimp or busbar style contacts. Contains safety interlock contacts as standard.

WPRR – 06 ZN 3x1 – 185 – 1 P N A

- WPRR – Rectangular Multi-Pole Rhino Series
- 06 – Shell style (options 00, 06)
- ZN – Material/finish (options RW, RF)
- 3x1 – Contact array (X contacts by Y contacts)
- 185 – Current rating (options 85, 120, 185, 340, 500, 1000)
- 1 – Contact termination (1, 2, 3, 5, 6, 7, 8)
- P – Contact gender (options P, S)
- N – Keyway (options N, A, B, C)
- A – Backshell (options A, B, C)

Circular Multi-Pole Rhino 38999

For use where multiple poles are required in a circular format. Supplied with crimp or busbar style contacts. Contains safety interlock contacts as standard.

WPTV – 06 ZN 33 – 3 – 185 – 1 P N A

- WPTV – Rhino 38999 Series
- 06 – Shell style (options 00, 01, 06, 07)
- ZN – Material/finish (options RW, RF, SS, RB, RT)
- 33 – Shell size (options 29, 33, 37, 41)
- 3 – Number of contacts
- 185 – Current rating (options 85, 120, 185, 340, 500, 1000)
- 1 – Contact termination (1, 2, 3, 5, 6, 7, 8)
- P – Contact gender (options P, S)
- N – Keyway (options N, A, B, C, D, E)
- A – Backshell (options A, B, C)

Products are sold subject to Amphenol's conditions of sale ("the standard conditions"). All specifications and statements contained herein are believed to be correct at the time of printing, but no representation or warranty, express or implied, is given as to any specification or statement contained herein. Product specifications including performance characteristics are typical only and subject to deviation. Specifications are also subject to change without notice. Users should not assume that all safety measures are indicated or that other measures may not be required. No representation or warranty, express or implied, is given that any use of products (including any stated or suggested use) does not infringe any patent, registered design or other third party rights and no stated or suggested use of products can be taken to recommend any such infringement.

Design checklist

Operating environment

Min/max/ambient/working temperatures?
Space envelope inc. moving obstructions?
Weight restrictions?
Mechanical fixing/supports?
Shock and vibration levels?
Sealing requirements mated/unmated?

Electrical performance and load

Peak voltage and current?
Steady state voltage and current?
Duration of electrical load?
De-rating requirements at ambient temperature?
Screened or unscreened termination?

General

Specification requirements e.g. Mil spec, RoHS, GVA, etc?
Mounting preference – sq. flange, jam nut or in-line?
Panel thickness?
Straight or right angle backshell?
Cable source, size and type?
Contact gender and style?
Material and plating preference?
Keyway orientations?
Cable exit angle?
Accessories e.g. sealing gasket, castellated nut, caps?

Tooling

Crimp tooling and die set needs?
Assembly tooling and torque fixture needs?
Assembly instructions to be provided?

Added value solutions

Termination or kitting?
Cable assembly inc. overmoulding?
Bus-bar or box/panel build?
EMI filtering?

Commercial

Export licence requirements e.g. ITAR, end user statement?
Cost budget?
Alternative solution?

Amphenol LTD MILITARY & AEROSPACE

Notes

Notes

Amphenol LTD
MILITARY & AEROSPACE

Notes

Notes

BWC 5638 11/17

Worldwide sales contacts

Europe

Amphenol Ltd, UK
Thanet Way, Whitstable
Kent, CT5 3JF
United Kingdom
T: +44 1227 773 200

Amphenol Socapex, France
948, promenade de l'Arve BP29
74311 Thyez Cedex
France
T: +33 4 50 89 28 00

Amphenol Air LB, France
10 rue champ Raymond
08110 Carignan
France
T: +33 3 24 22 32 70

Amphenol AIR LB GmbH, Germany
Am Kleinbahnhof 4
66740 Saarlouis
Germany
T: +49 6831 981 00

Amphenol Nordic
T: +46 702 129 200

Amphenol Switzerland and South Centre
Switzerland, Slovenia, Serbia, Montenegro,Yugoslavia, Greece, Bulgaria
948, promenade de l'Arve BP29
74311 Thyez Cedex
France
T: +33 4 50 89 28 00

Amphenol Italy
Via Barbaiana n.5
20020 Lainate, Milano
Italy
T: +39 293 254 214

Amphenol Benelux
Zadelmaker 121 NL
2401 PD Alphen aan den Rijn
The Netherlands
T: +31 172 444 903

Amphenol Iberica
Edificio Burgosol, Oficina nr 55
Comunidad de Madrid,
35 bis Las Rozas (Madrid)
Spain
T: +34 91 640 73 06

Amphenol Poland and Central East Europe
Austria, Poland, Czech Republic, Slovakia, Romania
Wiener gasse 68
2380 Perchtoldsdorf
Austria
T: +43 699 10396 071

North America

Amphenol PCD USA
72 Cherry Hill Drive
Beverly, MA. 01915-1065
USA
T: +1 978 624 3400

Amphenol Canada Corporation
605 Milner Avenue
Toronto, Ontario
Canada
M1B 5X6
T: +1 416 291 4401

Asia

Amphenol Daeshin, Korea
558 SongNae-2 Dong, SoSa-Gu,
Bucheon City, Gyeonggi-do
422-040, Korea
T: +82 32 610 3800

Amphenol Interconnect India Private Limited
105 Bhosari Industrial Area
Pune 411 026
India
T: +91 203 068 8304

Amphenol Japan
471-1 Deba, Ritto-City
Shiga 520-3041
Japan
T: +81 77 553 8501

Amphenol PCD CO Ltd, China
Building 21, 1st Liao Keng
Industrial Zone, Shi Yan Street
Bao An District, Shenzhen
518108
China
T: +86 755 8173 8000

Other areas

Amphenol Argentina
Av. Callao 930 2do piso Oficina B
"Plaza" C1023 – AAP, Buenos Aires
Argentina
T: +54 11 4815 6886

Amphenol Australia Pty Limited
22 Industry Boulevard
Carrum Downs, Victoria 3201
Australia
T: +61 8796 8888

Amphenol Do Brazil
Rua Diogo Moreira
132, 20 andar, rooms 2001-2-3
CEP: 05423 010 Sao Paulo SP
Brazil
T: +55 11 3815 1003

Amphenol Bar-Tec Ltd, Israel
3 Hagavish Street, K fir-Barkan Bldg
East Industrial Zone
Kfar-Sava, 44102
Israel
T: +972 9 764 4100

Amphenol Mexico
Prolongacion Reforma 61-6 B2
Col Passo de las Lomas
CP.013130
Mexico
T: +52 55 5258 9984

Amphenol Russia
Yaroslavskaja Street 8
129164 Moscow
Russia
T: +7 495 937 6341

Amphenol South Africa
30 Impala Road
2196 Chislehurston
Sandton
South Africa
T: +27 11 783 9517

Amphenol Turkey
Sun Plaza 15 Kat:
15 Maslak Hah. Bilim
Sok. No.5
Sisli/Istanbul, 34398
Turkey
T: +90 212 367 92 19

Amphenol LTD
MILITARY & AEROSPACE

For more information call **+44 (0)1227 773200**

Amphenol Ltd Thanet Way Whitstable Kent CT5 3JF | Email: info@amphenol.co.uk | www.amphenol.co.uk

November 2017